F5823/34-Ida
IDA

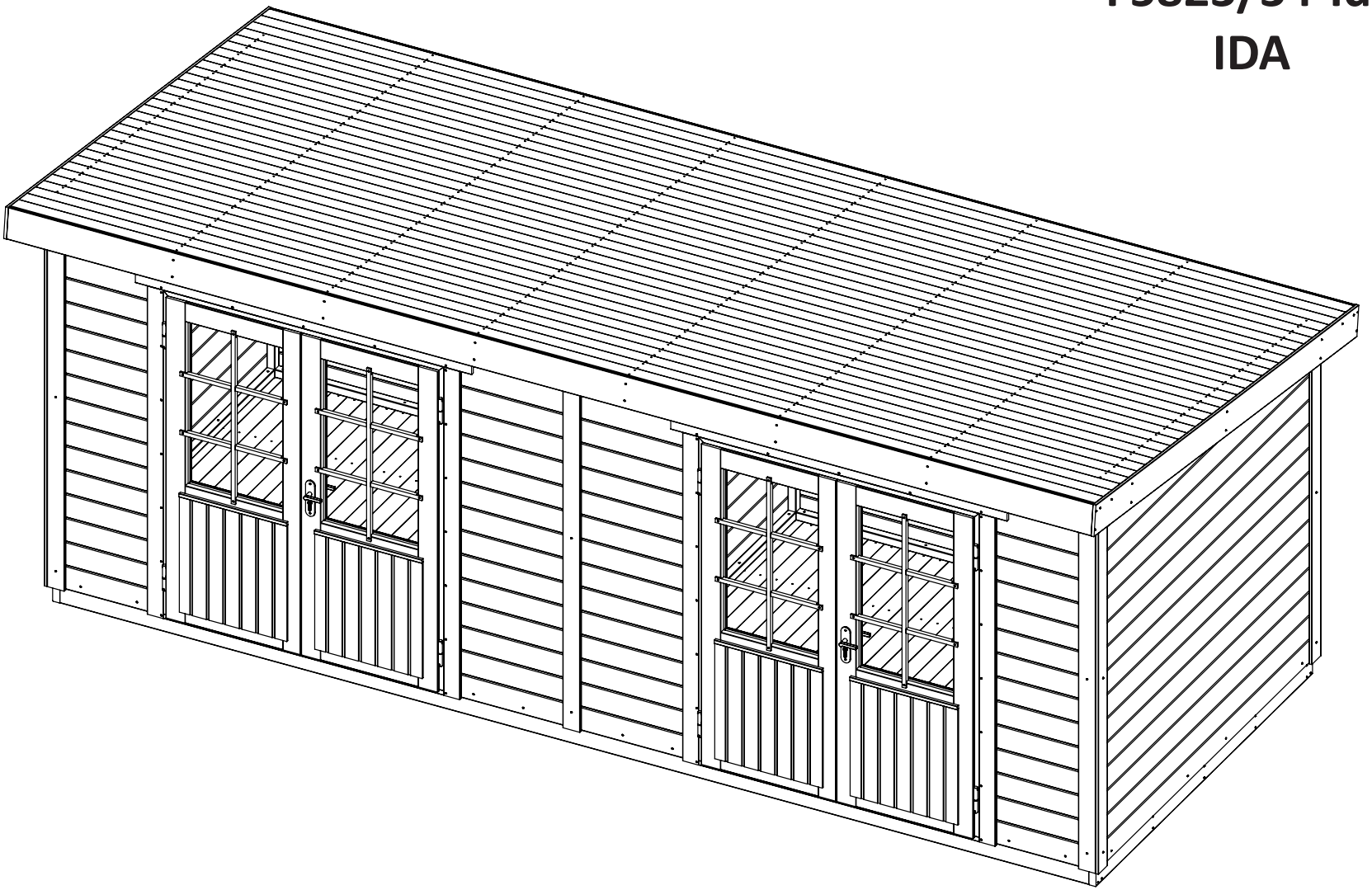

DE - Anweisungen für Montage, Wartung und sicheren Gebrauch.
EN - Instructions for assembly, maintenance and safe use.
FR - Instructions de montage, d'entretien et d'utilisation en toute sécurité.
NL - Instructies voor montage, onderhoud en veilig gebruik.
CZ - Pokyny pro montáž, údržbu a bezpečné použití.
SK - Návod na montáž, údržbu a bezpečné používanie.
SWE - Monteringsanvisning

Polhus
Polhus Aktiebolag
Djäknegatan 31
211 35 Malmö
https://www.polhus.com/

Issue - D 05/09/2023

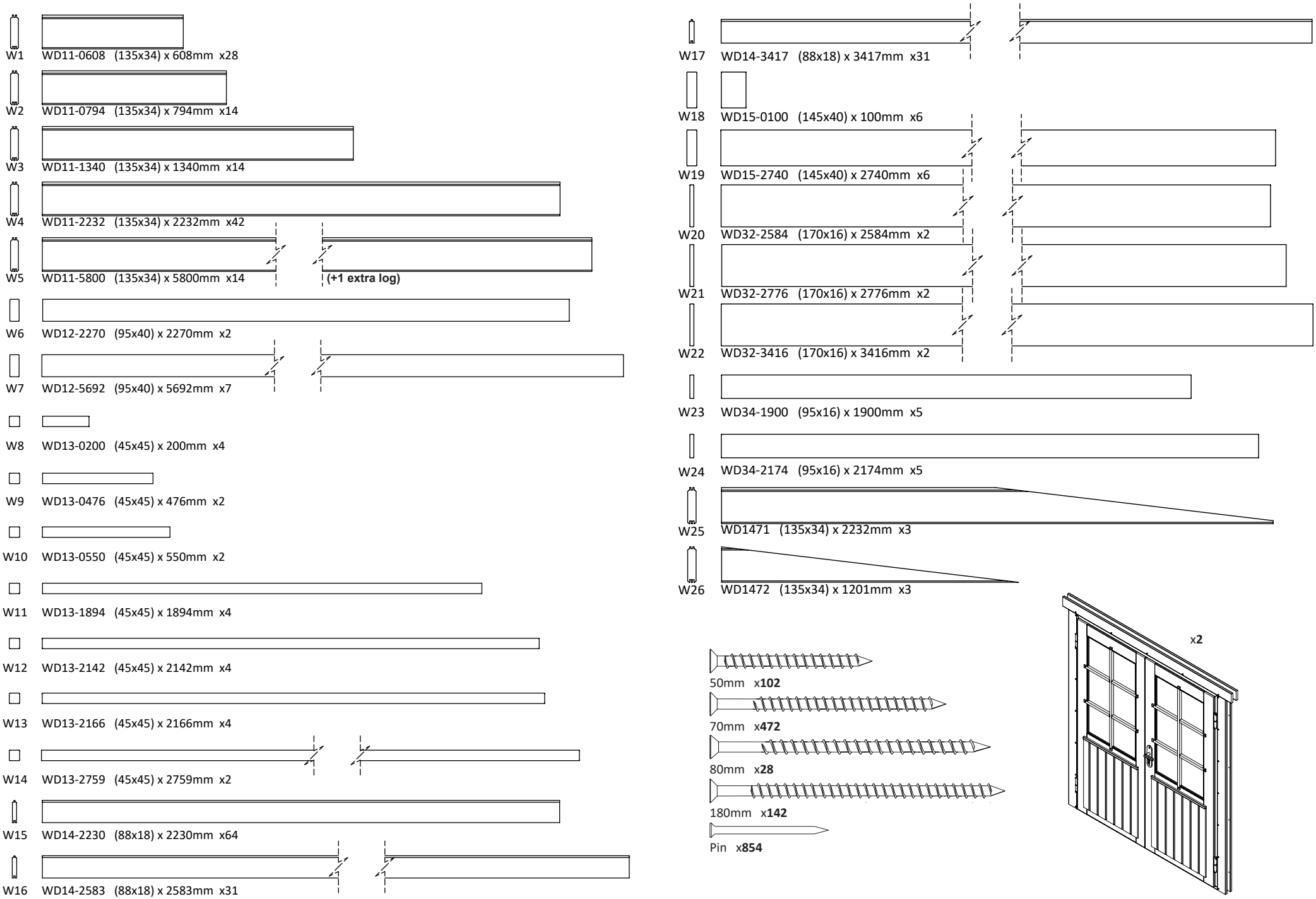
W1 WD11-0608 (135x34) x 608mm x28
W2 WD11-0794 (135x34) x 794mm x14
W3 WD11-1340 (135x34) x 1340mm x14
W4 WD11-2232 (135x34) x 2232mm x42
W5 WD11-5800 (135x34) x 5800mm x14
(+1 extra log)
W6 WD12-2270 (95x40) x 2270mm x2
W7 WD12-5692 (95x40) x 5692mm x7
W8 WD13-0200 (45x45) x 200mm x4
W9 WD13-0476 (45x45) x 476mm x2
W10 WD13-0550 (45x45) x 550mm x2
W11 WD13-1894 (45x45) x 1894mm x4
W12 WD13-2142 (45x45) x 2142mm x4
W13 WD13-2166 (45x45) x 2166mm x4
W14 WD13-2759 (45x45) x 2759mm x2
W15 WD14-2230 (88x18) x 2230mm x64
W16 WD14-2583 (88x18) x 2583mm x31
W17 WD14-3417 (88x18) x 3417mm x31
W18 WD15-0100 (145x40) x 100mm x6
W19 WD15-2740 (145x40) x 2740mm x6
W20 WD32-2584 (170x16) x 2584mm x2
W21 WD32-2776 (170x16) x 2776mm x2
W22 WD32-3416 (170x16) x 3416mm x2
W23 WD34-1900 (95x16) x 1900mm x5
W24 WD34-2174 (95x16) x 2174mm x5
W25 WD1471 (135x34) x 2232mm x3
W26 WD1472 (135x34) x 1201mm x3
50mm x102
70mm x472
80mm x28
180mm x142
Pin x854
x2

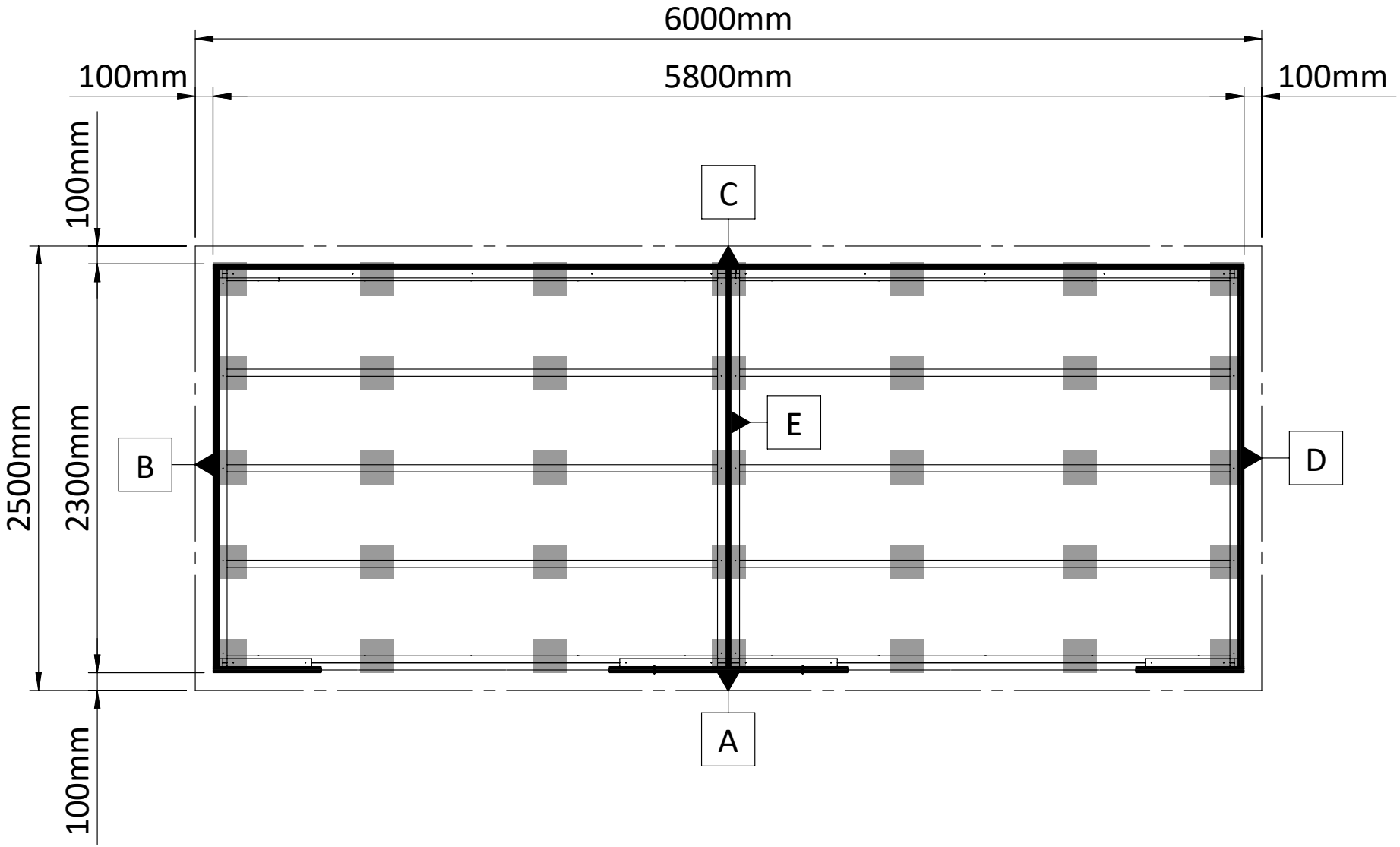

PLINTPLAN / FOUNDATION PLAN / BETONBLOCK / PLAN DE FONDATIONS

1A

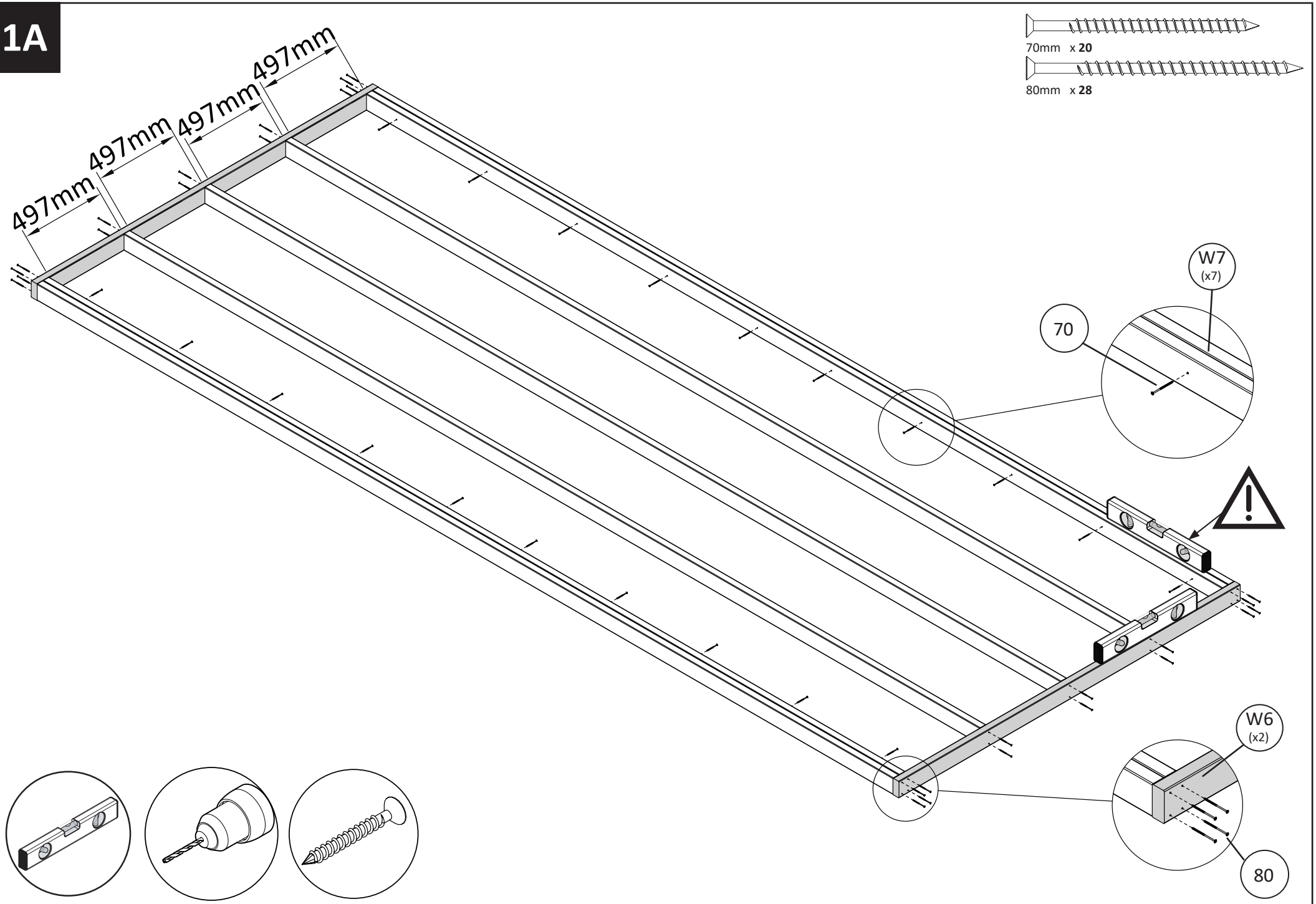

1B

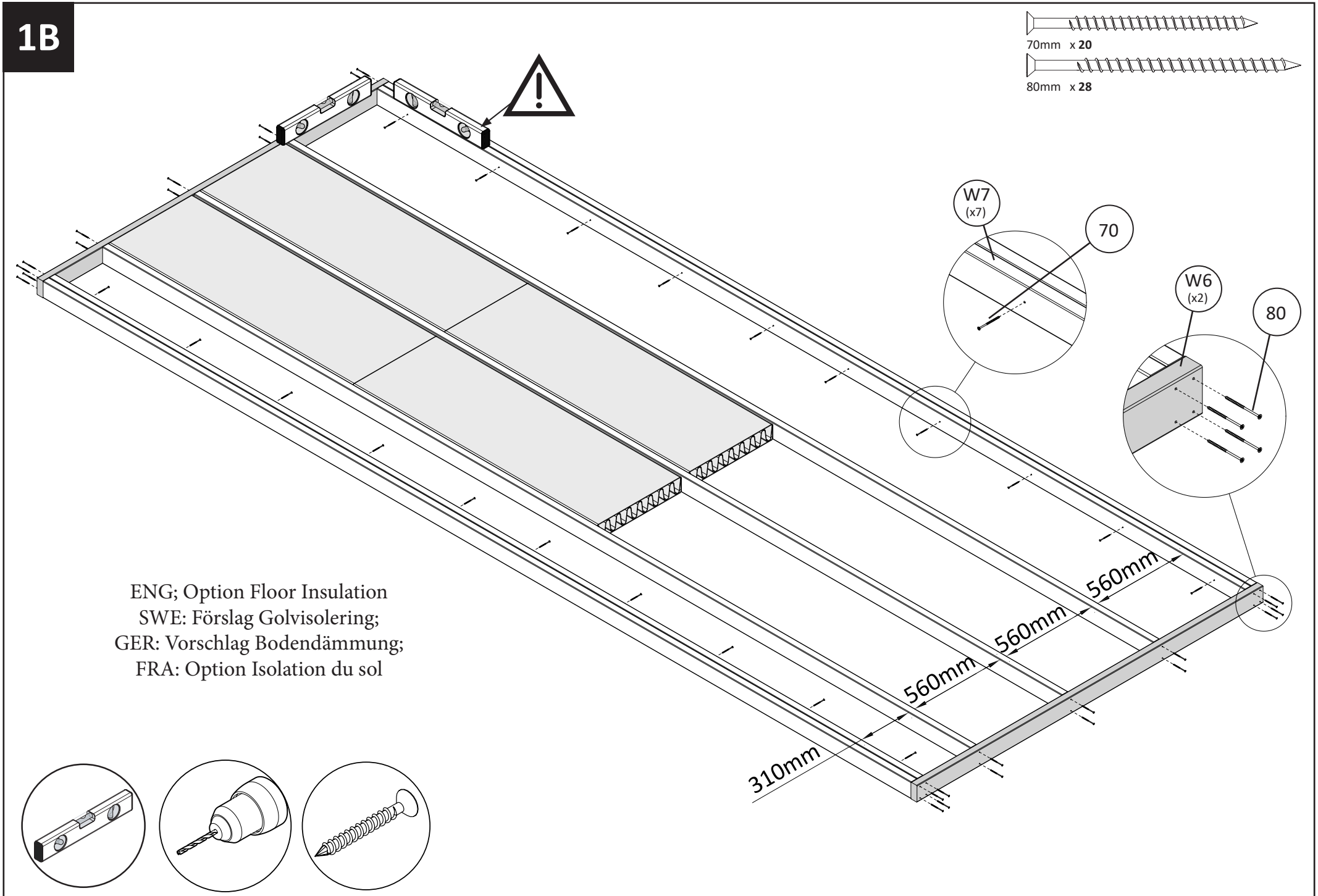

ENG; Option Floor Insulation
SWE: Förslag Golvisolering;
GER: Vorschlag Bodendämmung;
FRA: Option Isolation du sol

2

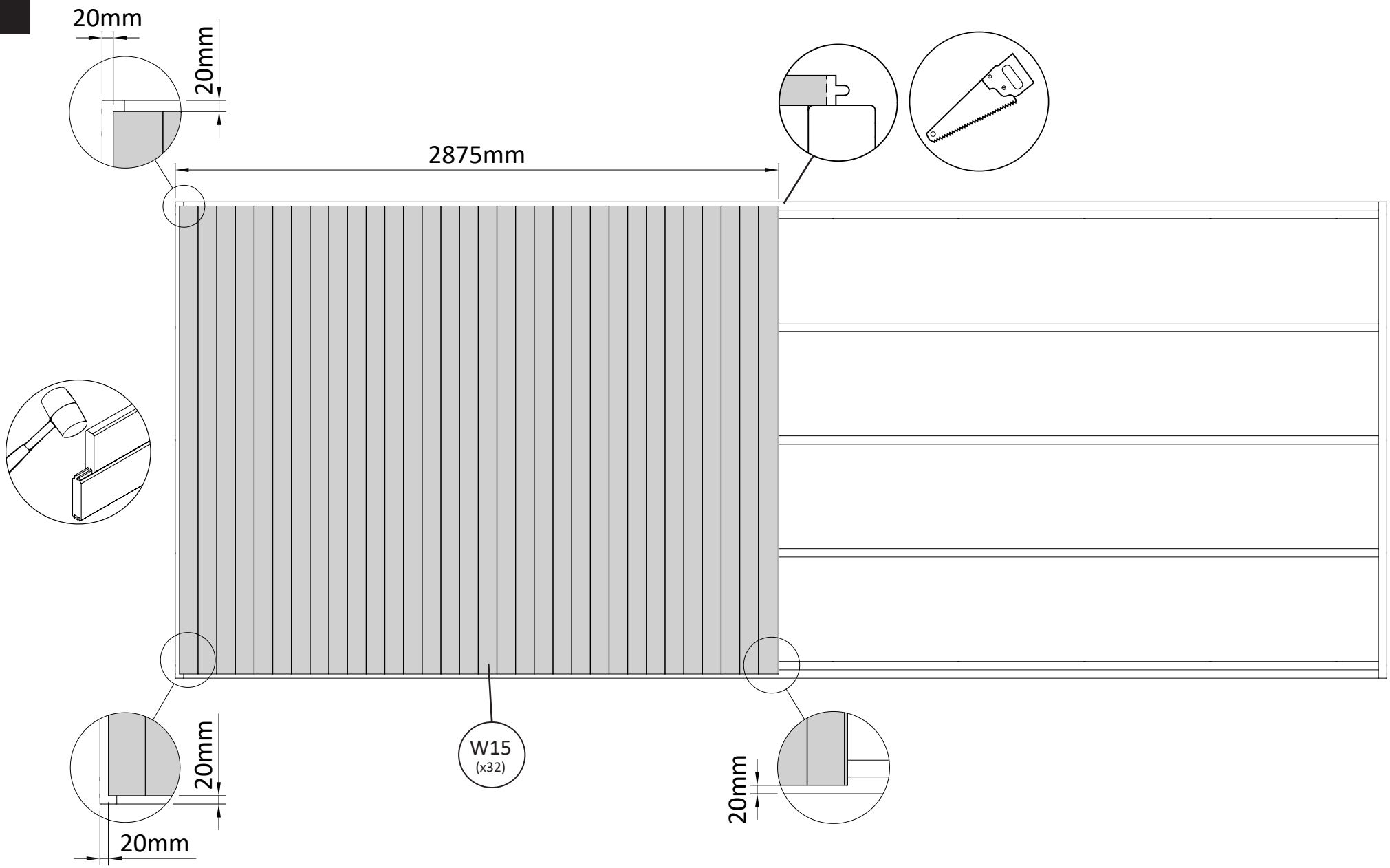

3

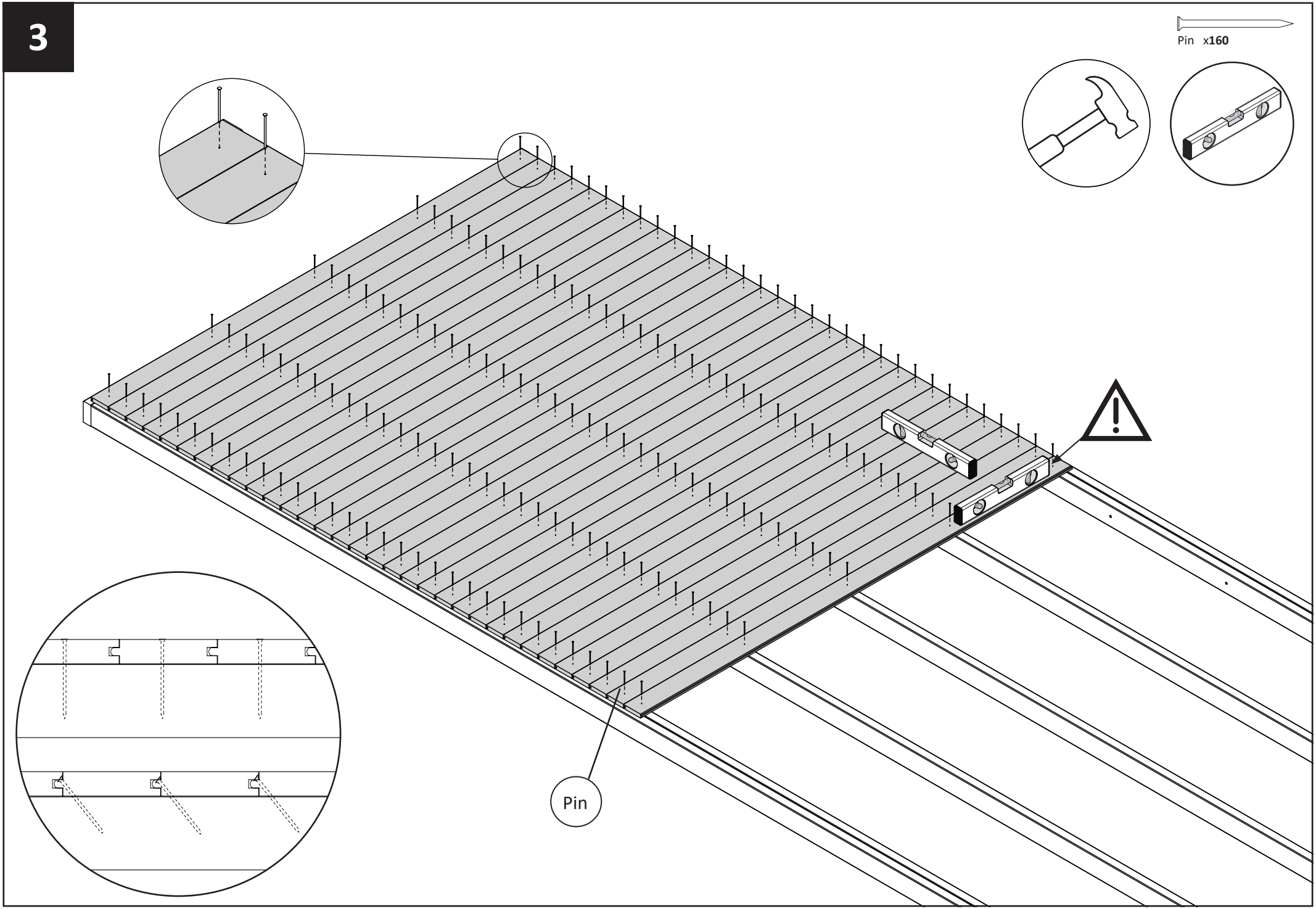

4

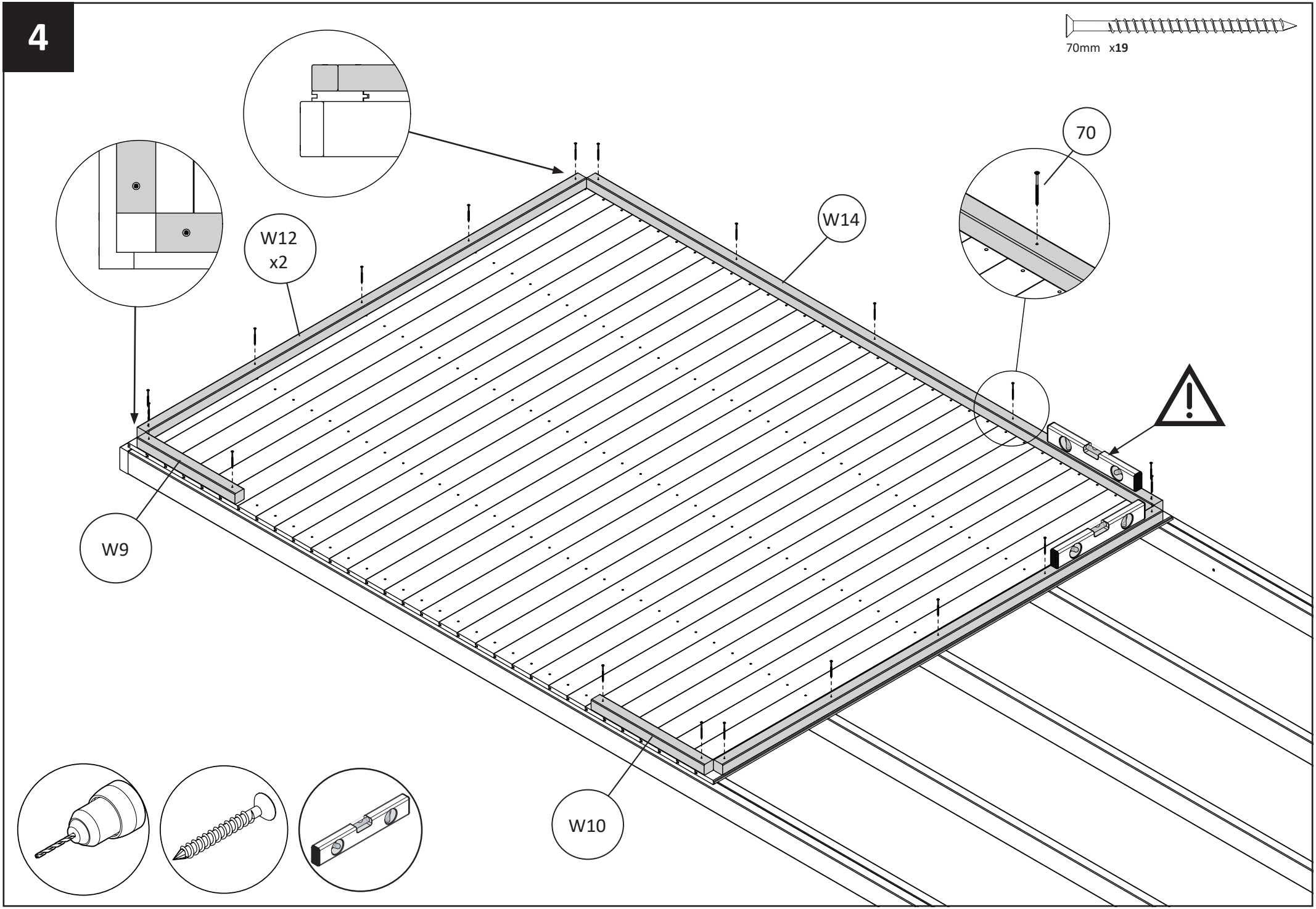

5

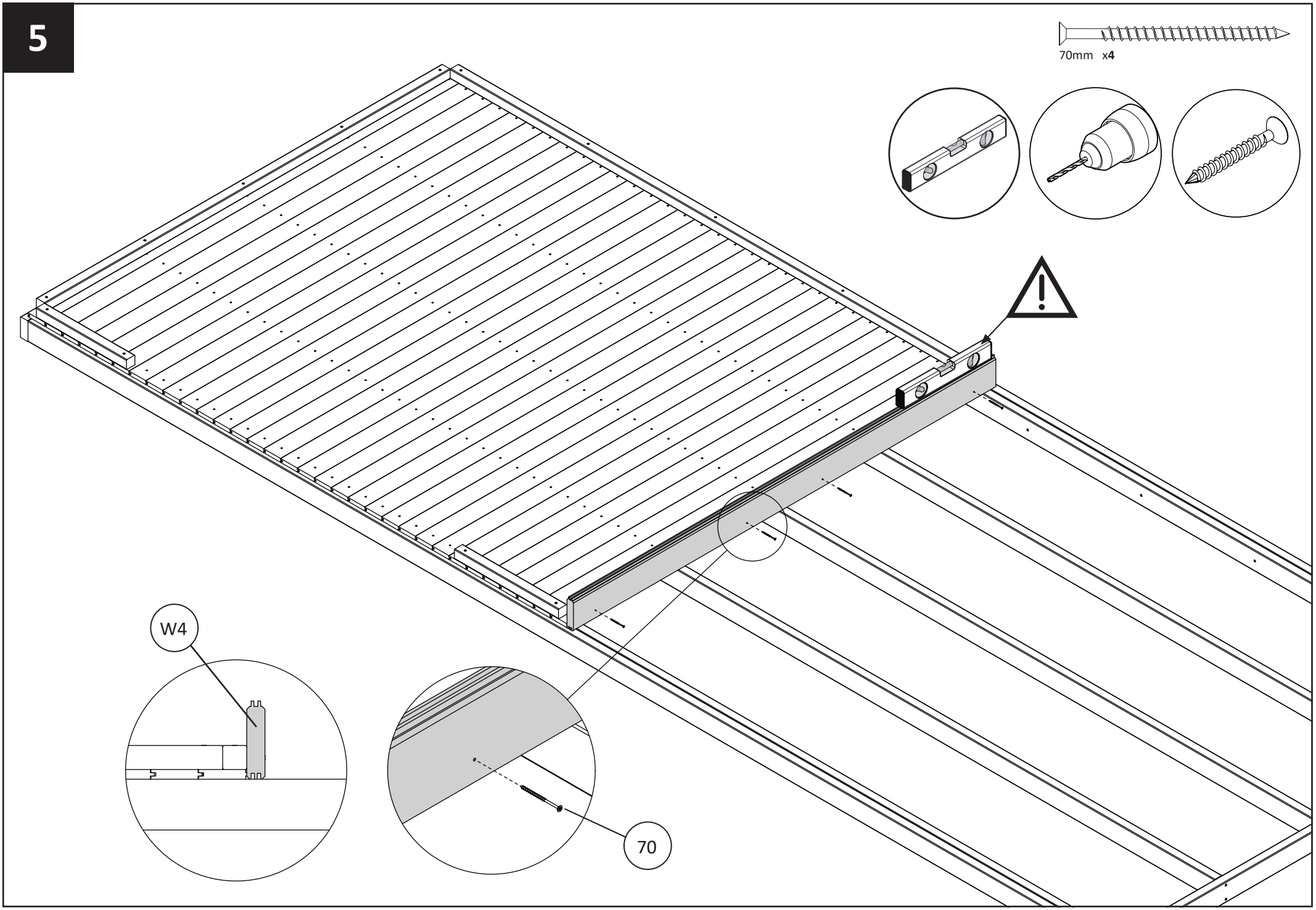

6

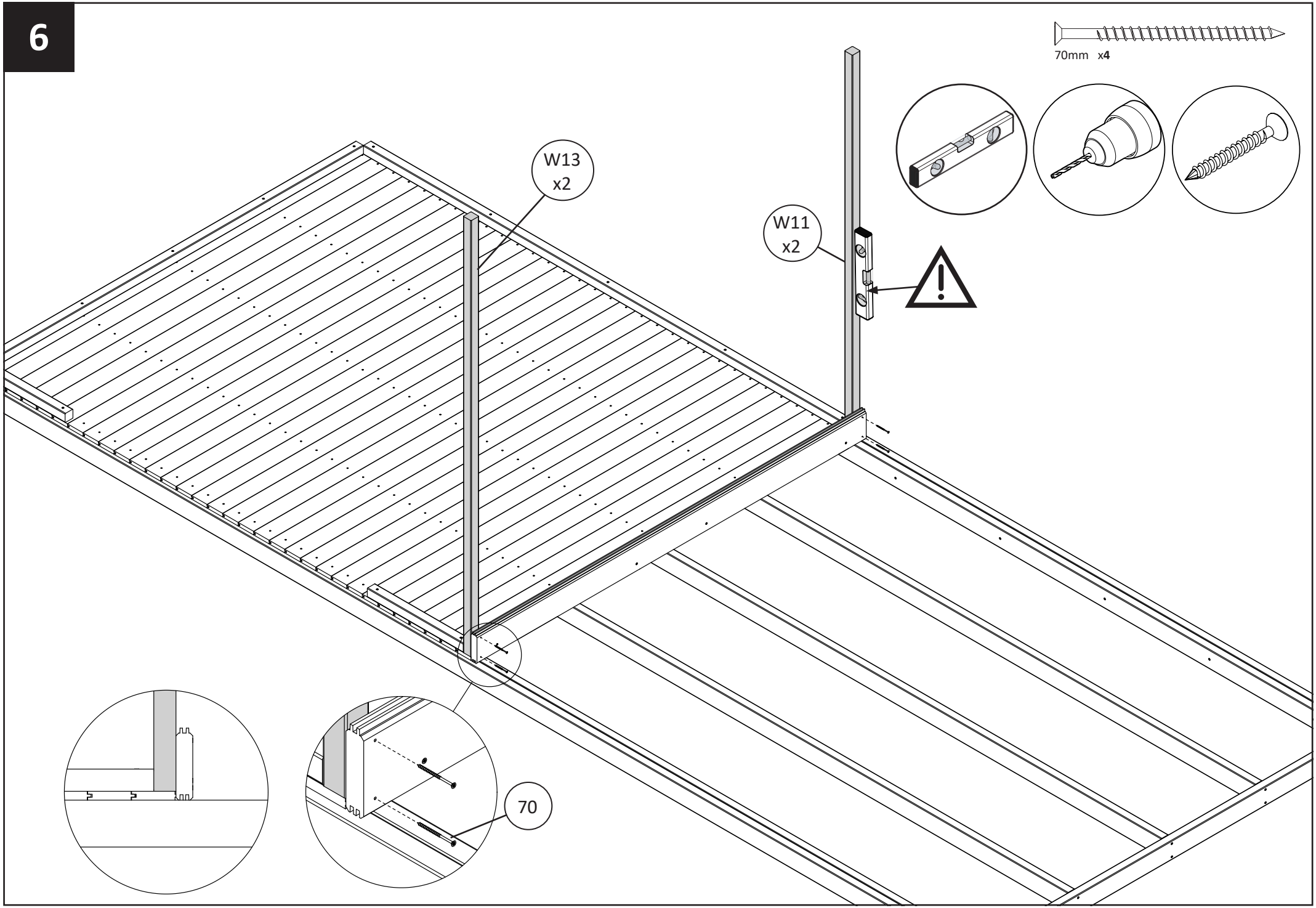

7

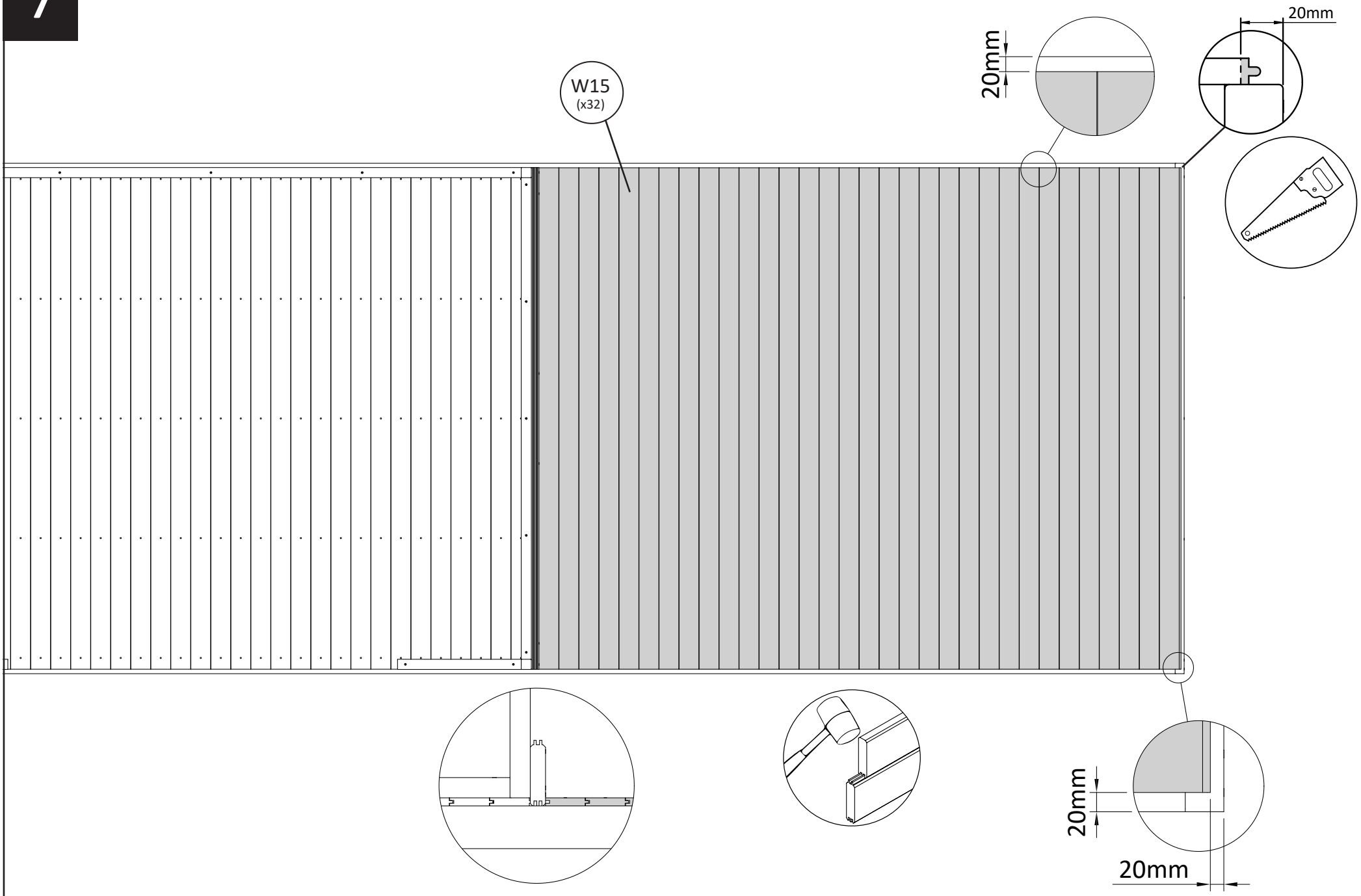

8

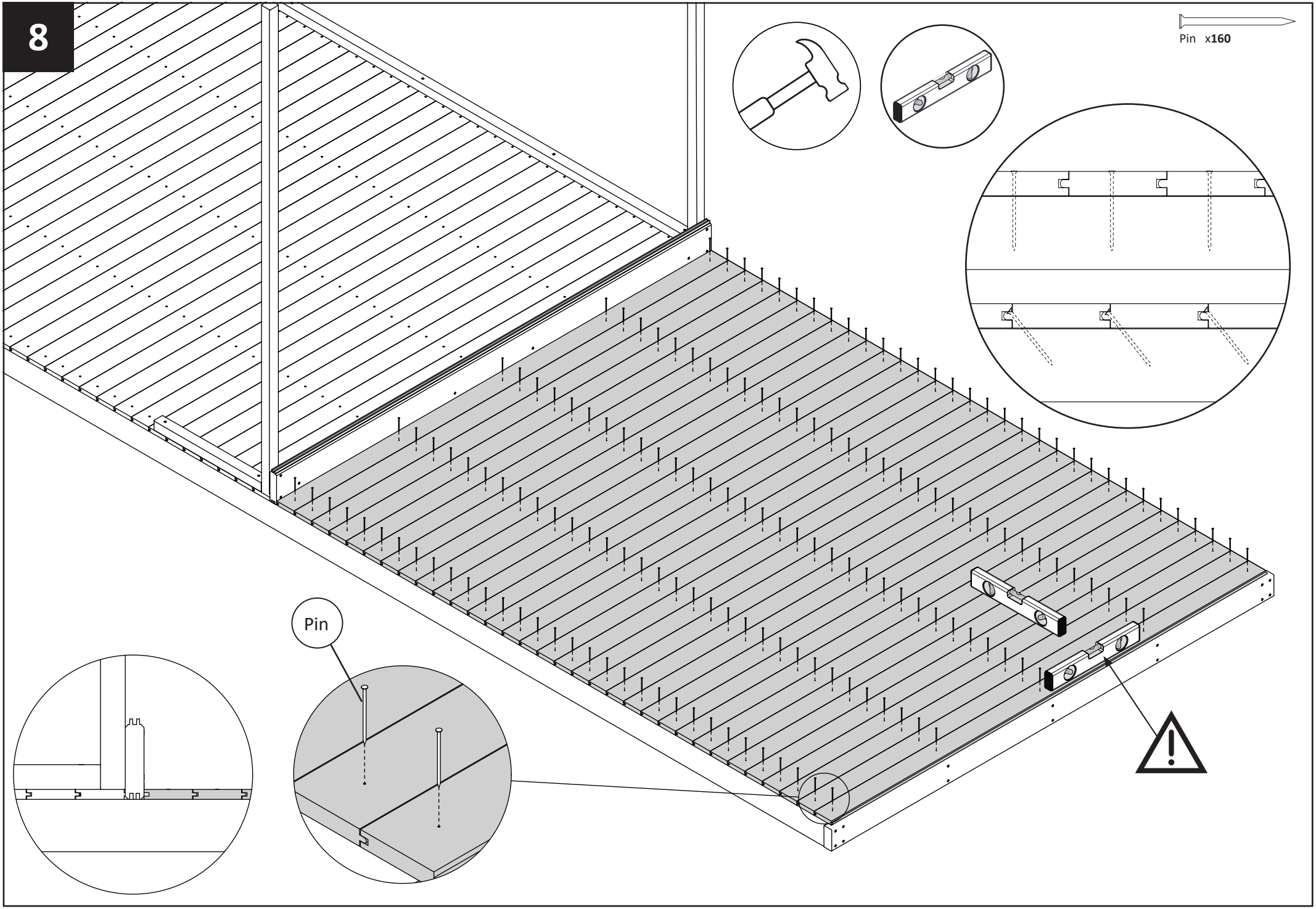

9

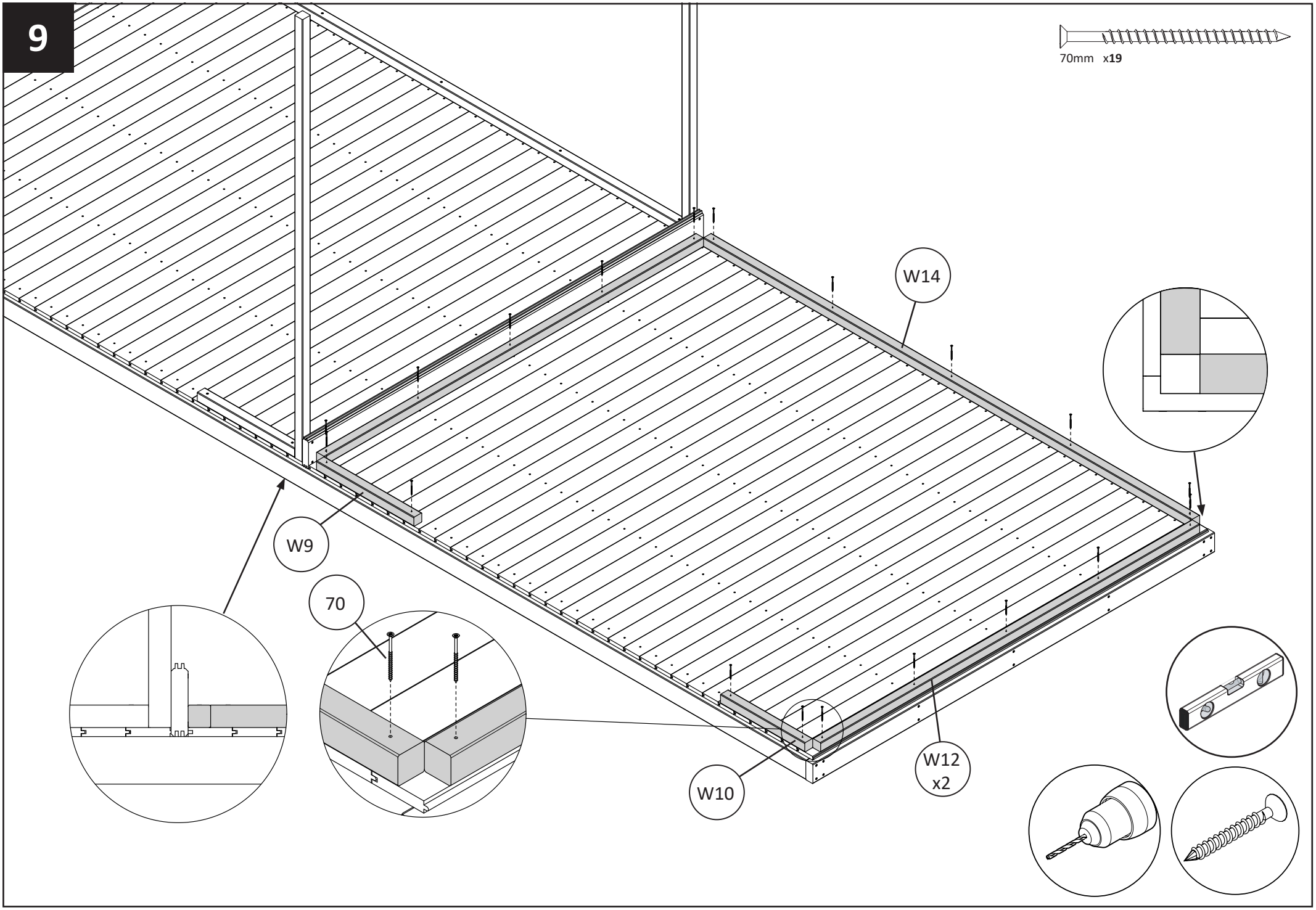

10

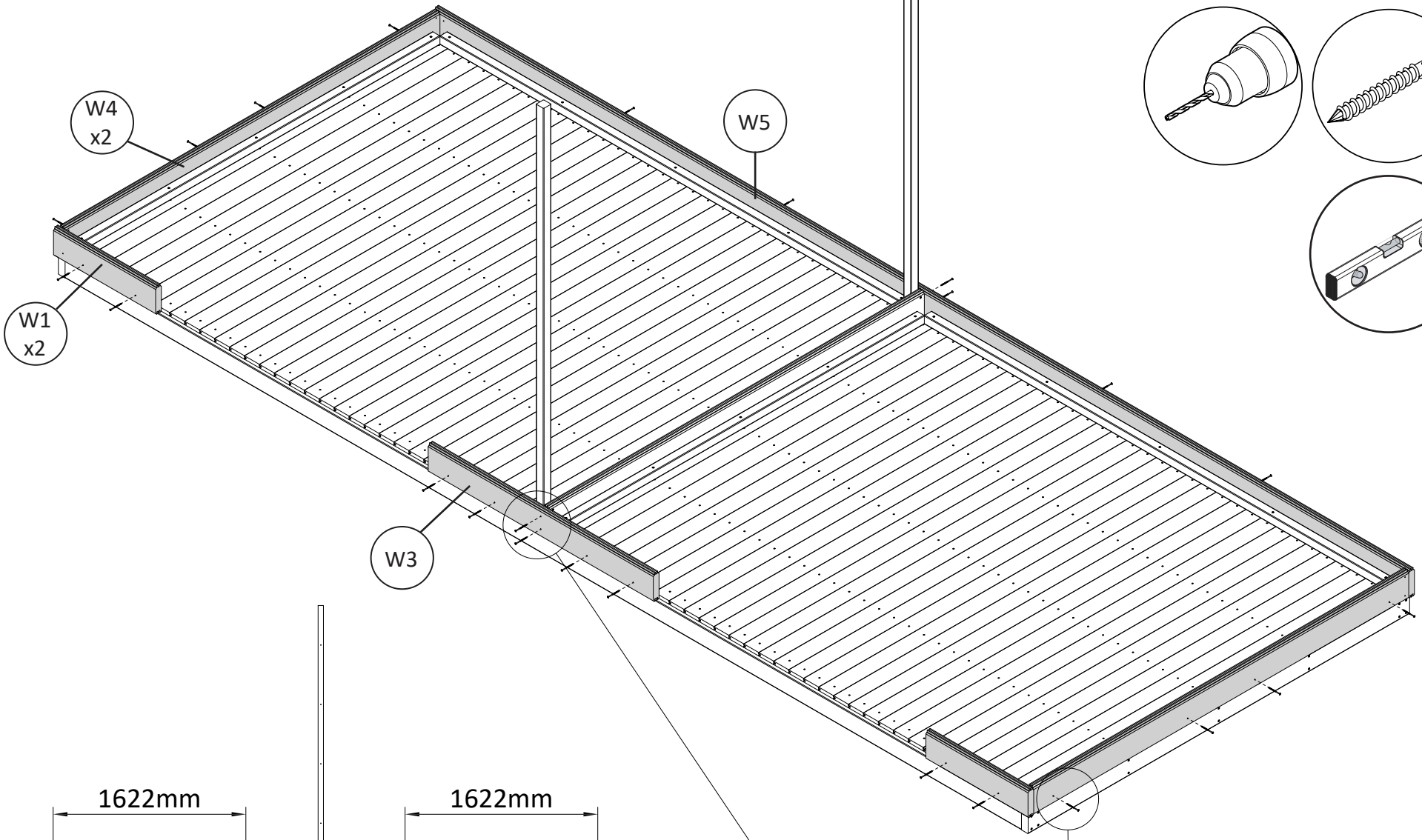

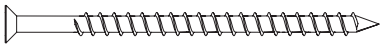

70mm x**24**

11

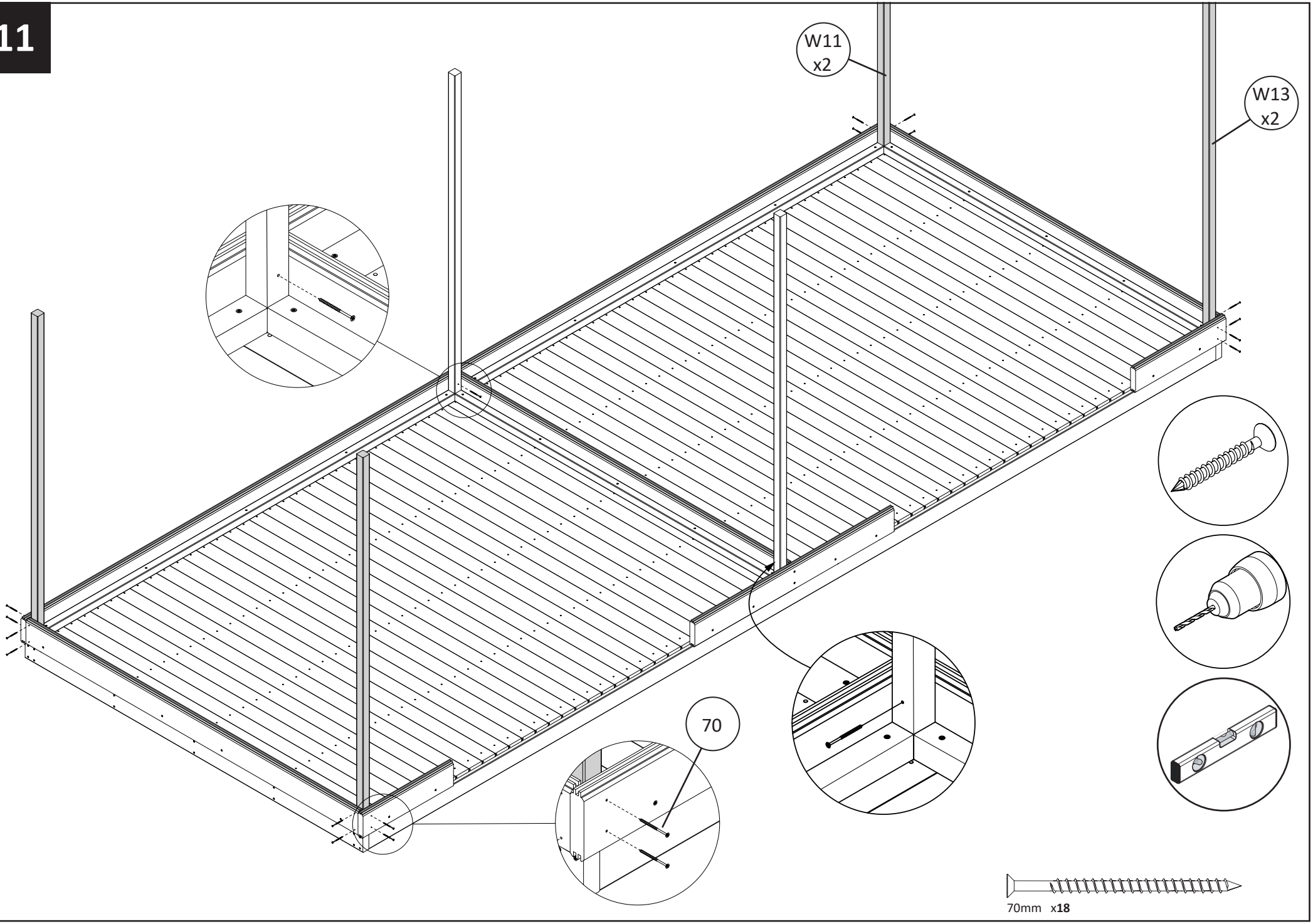

12

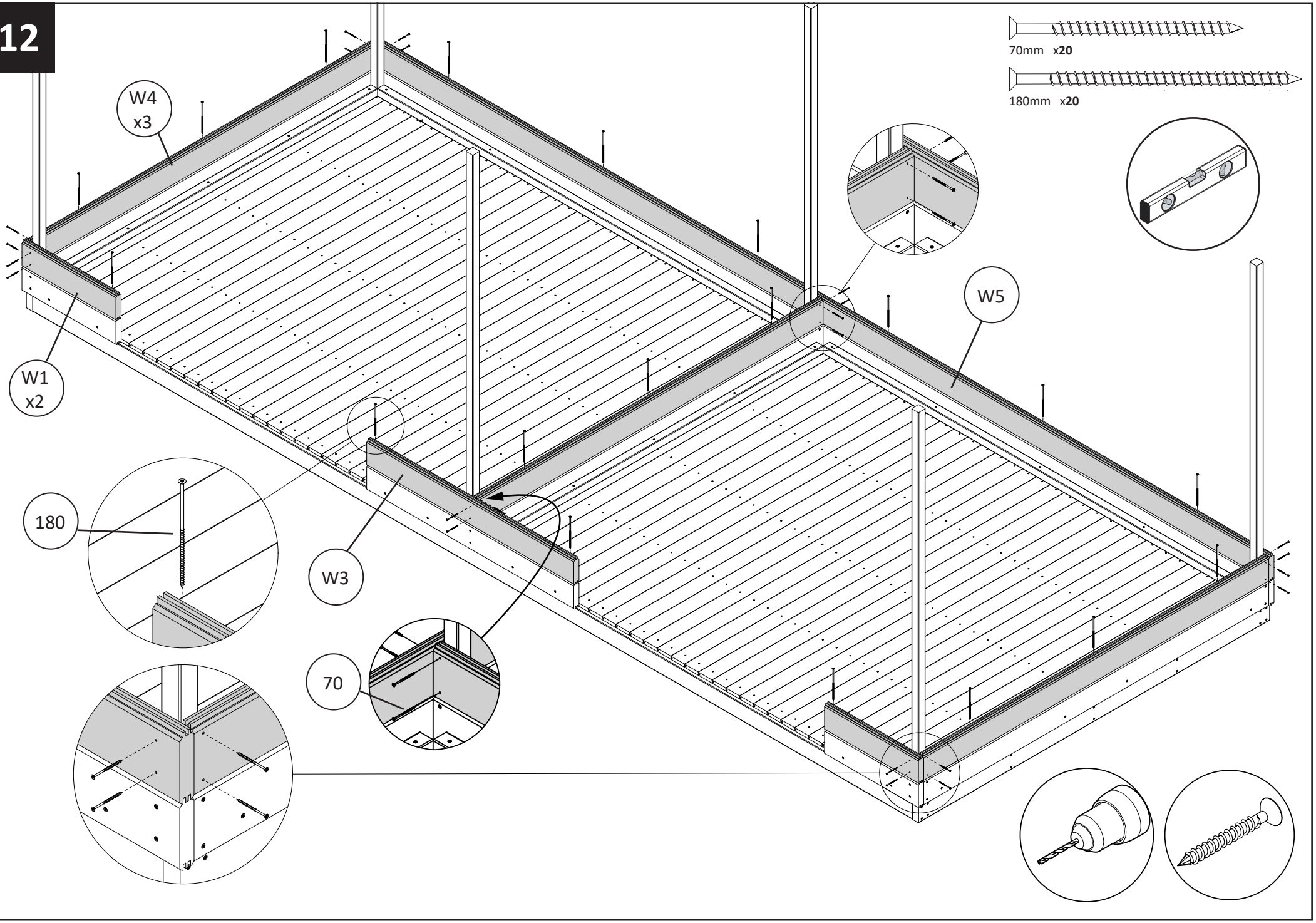

13

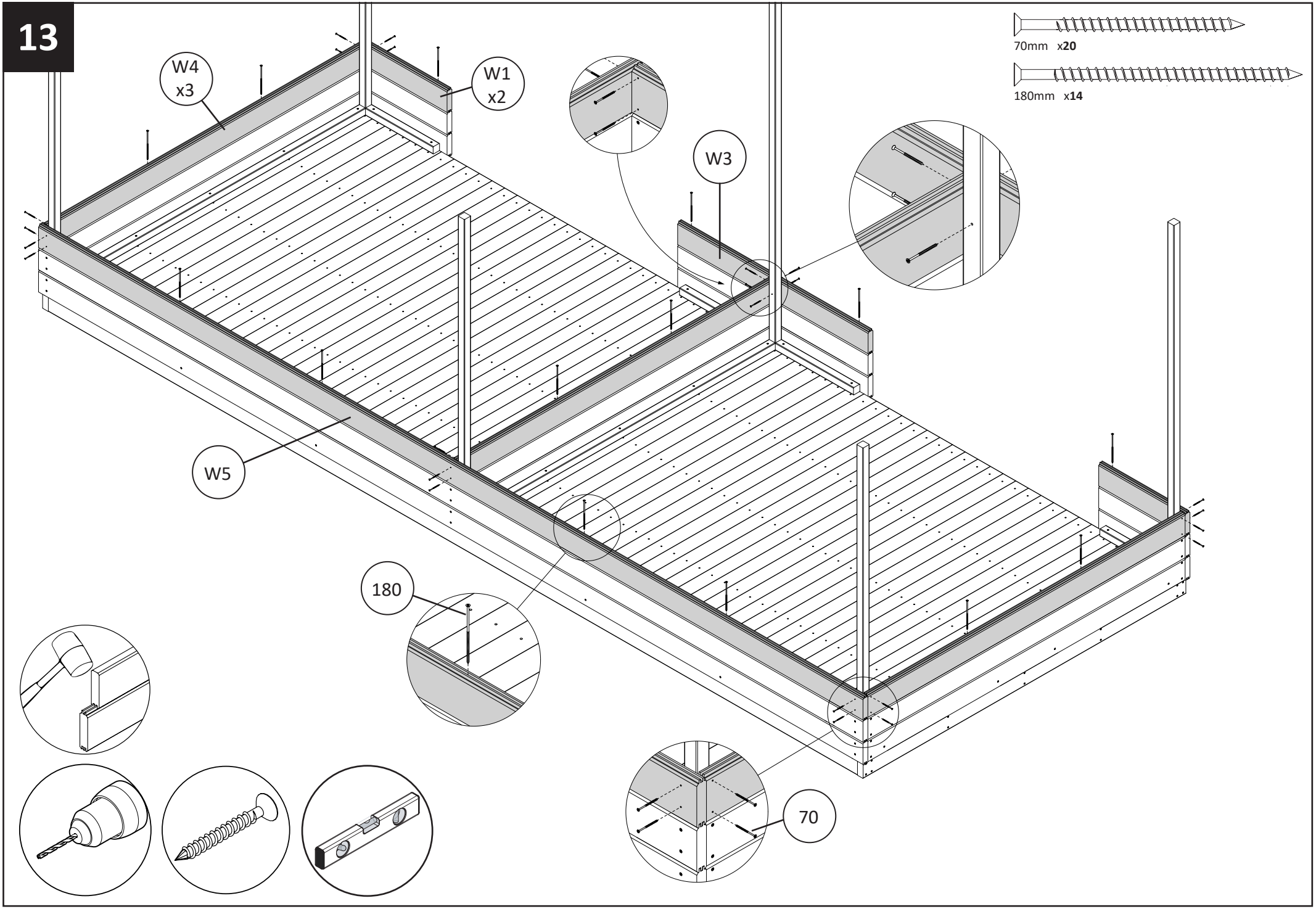

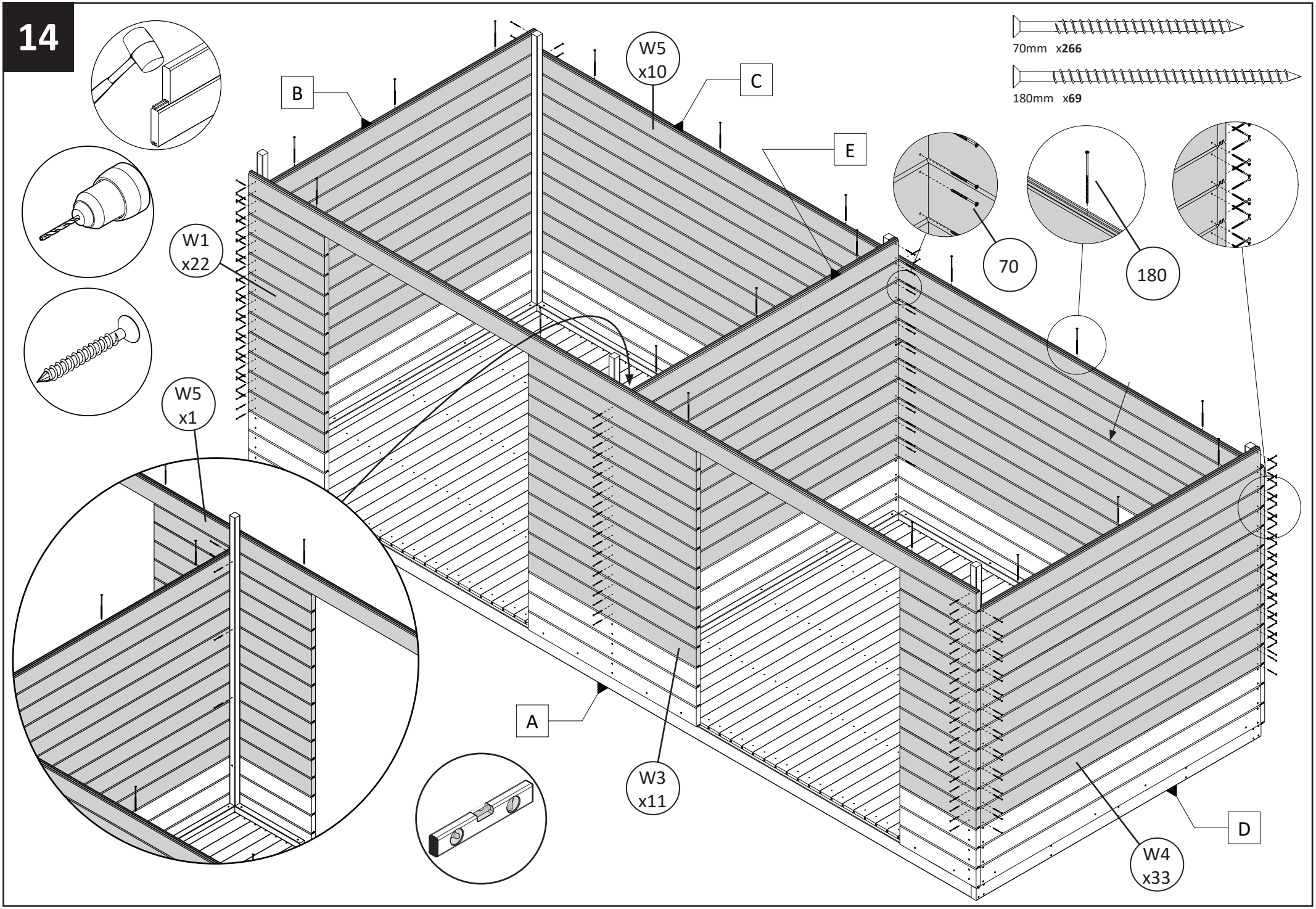
70mm x266
180mm x69
B
W5
x10
C
E
70
180
W1
x22
W5
x1
A
W3
x11
D
W4
x33

A

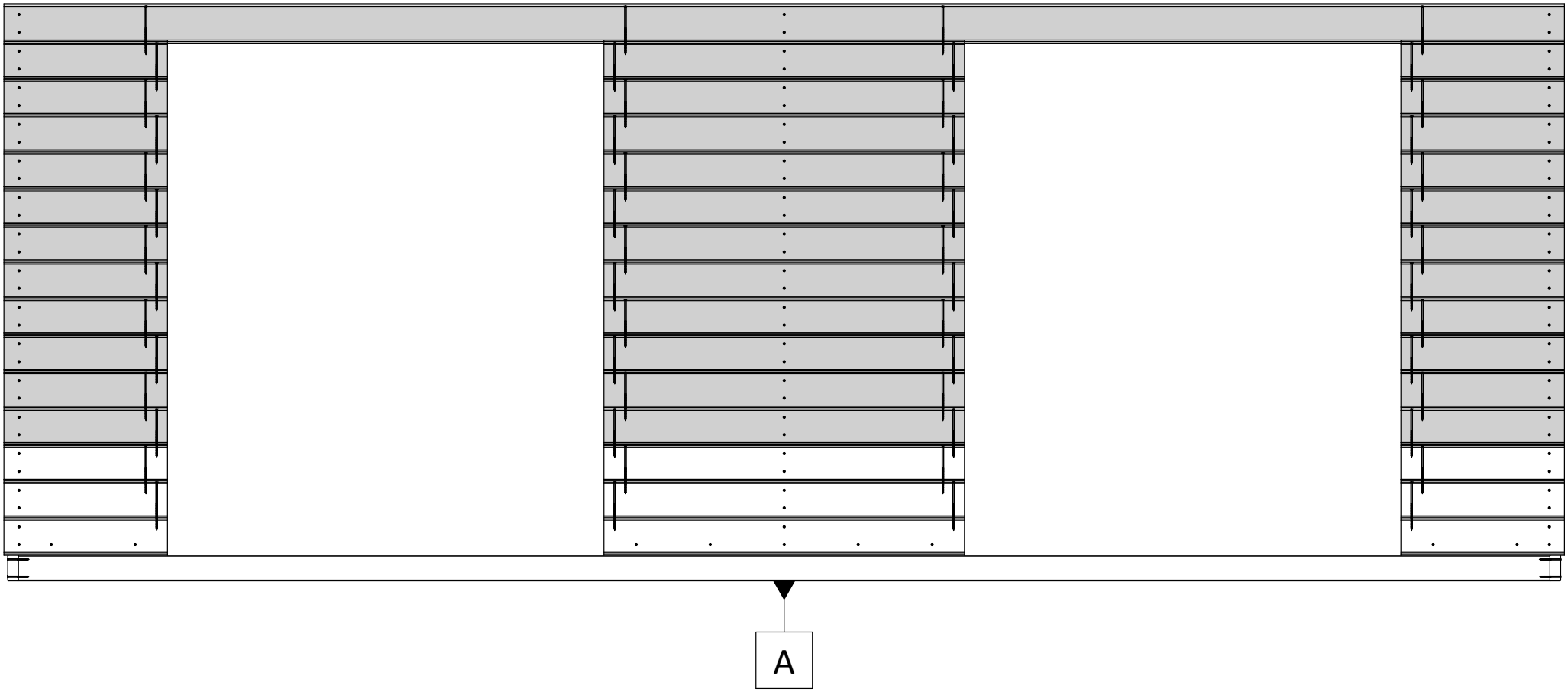

B

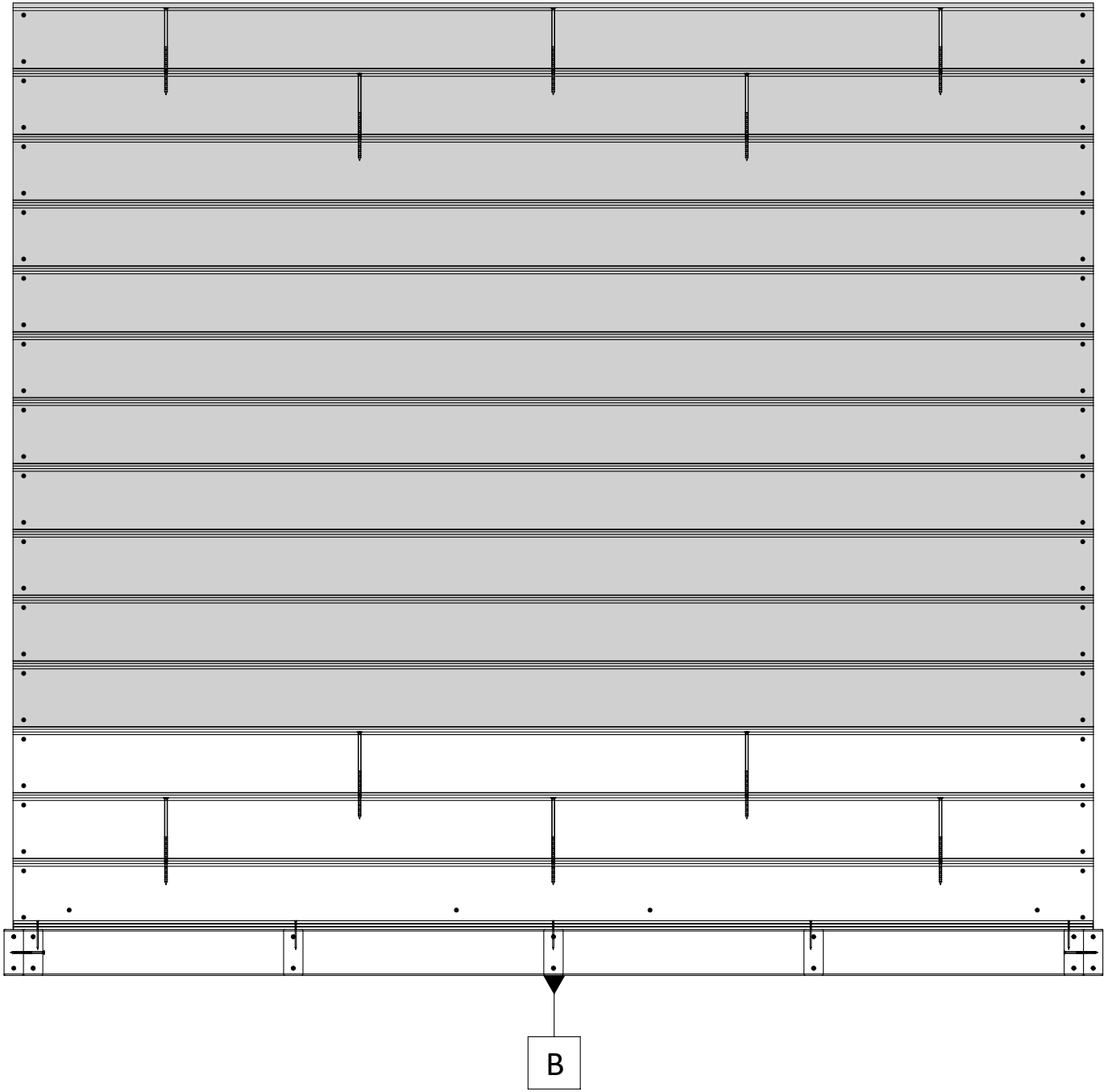

C

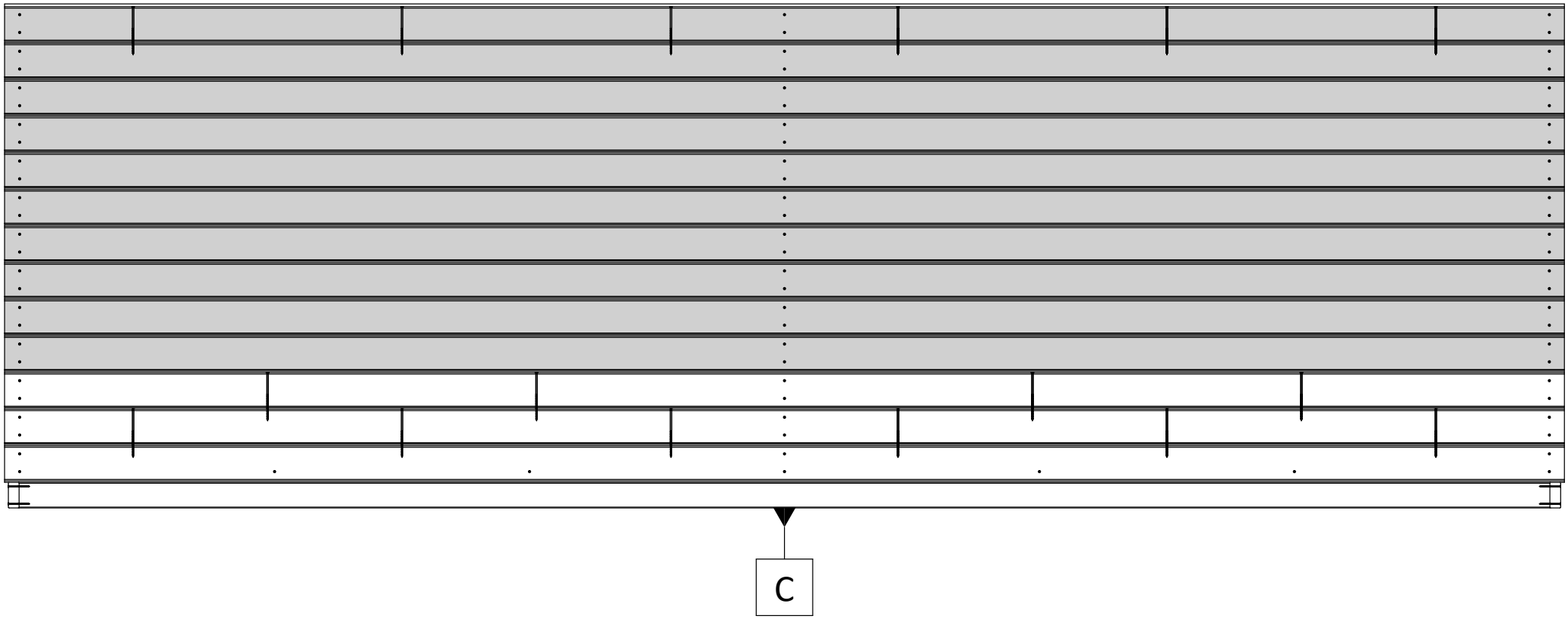

D

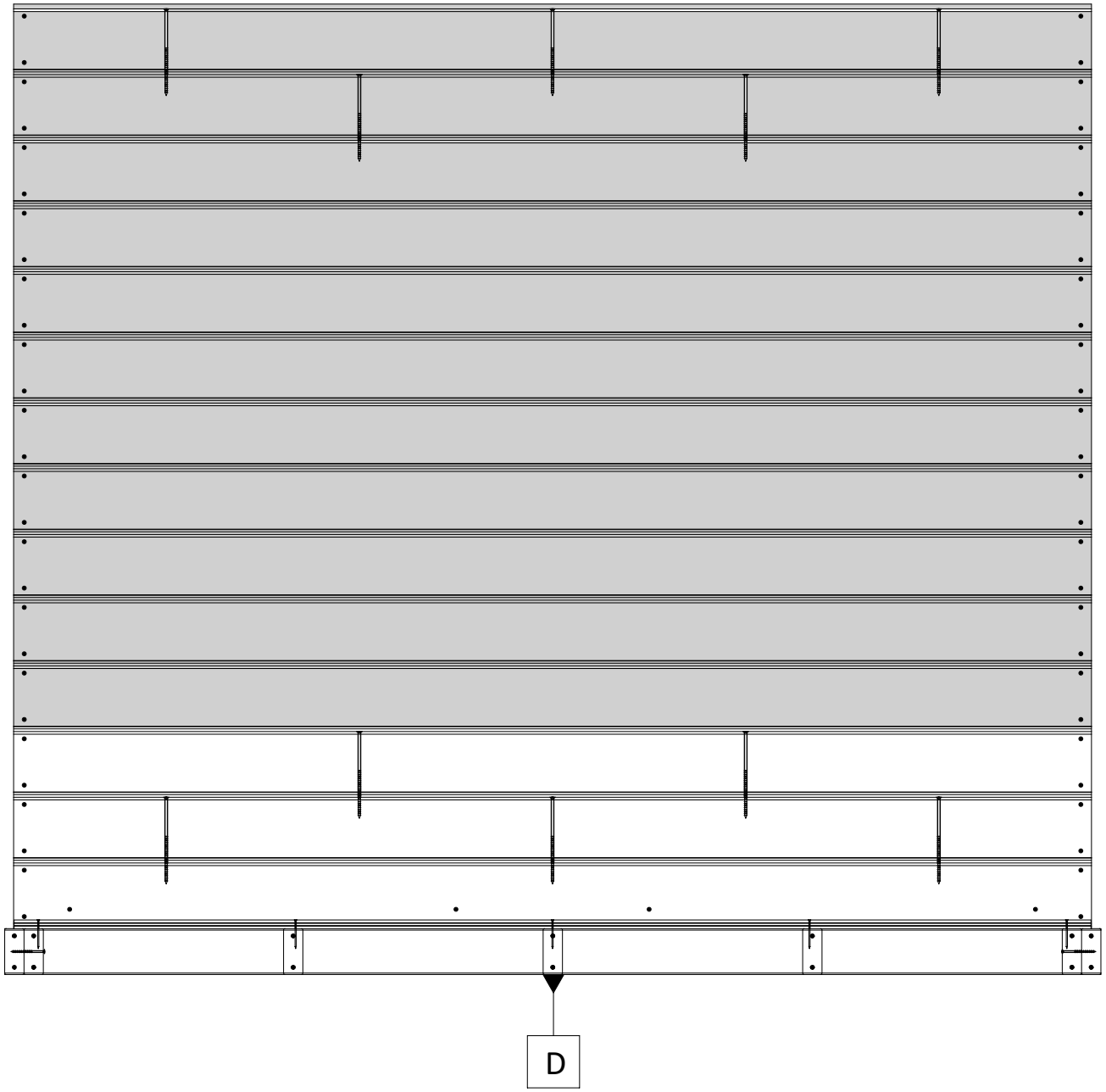

E

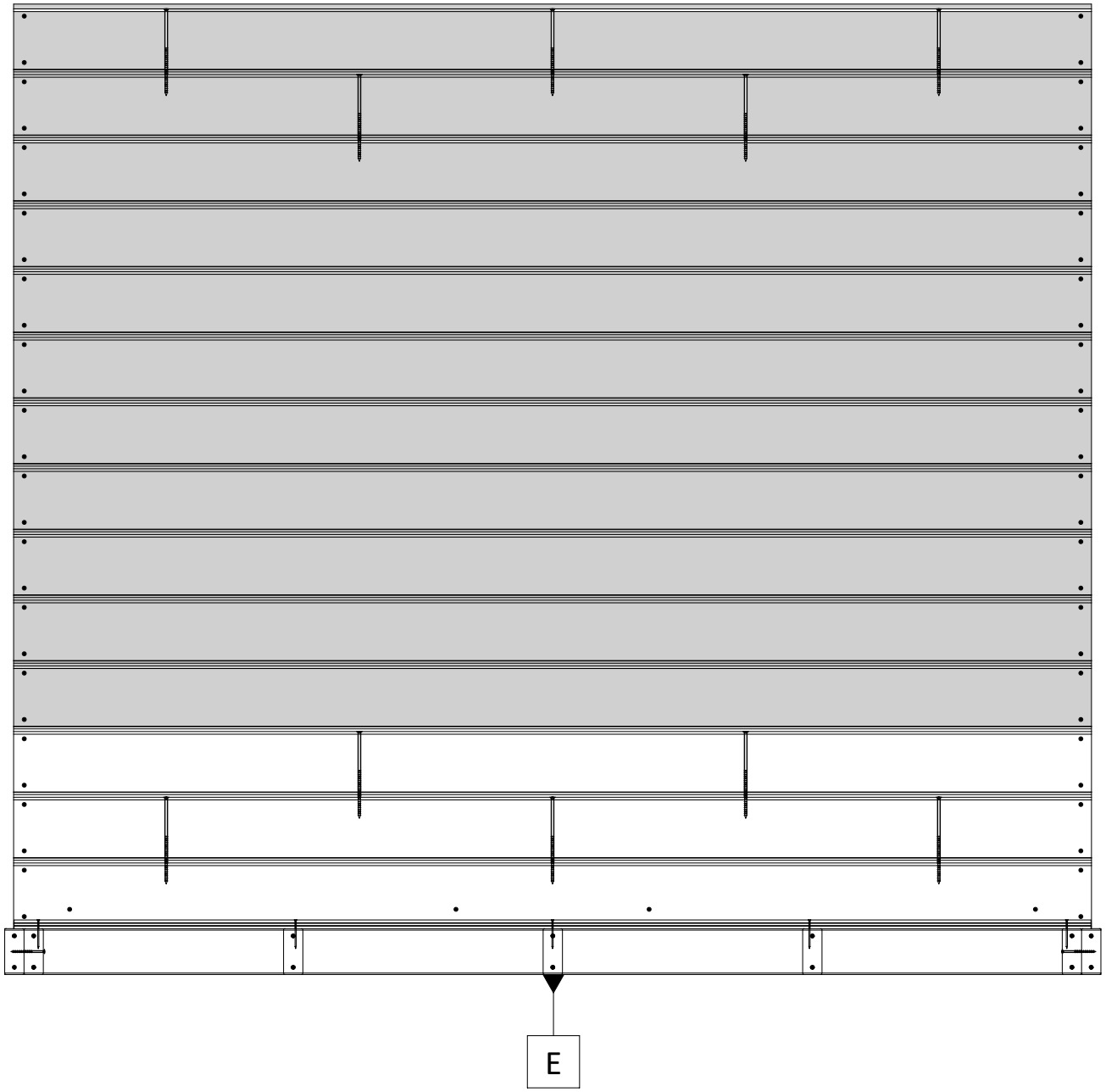

15

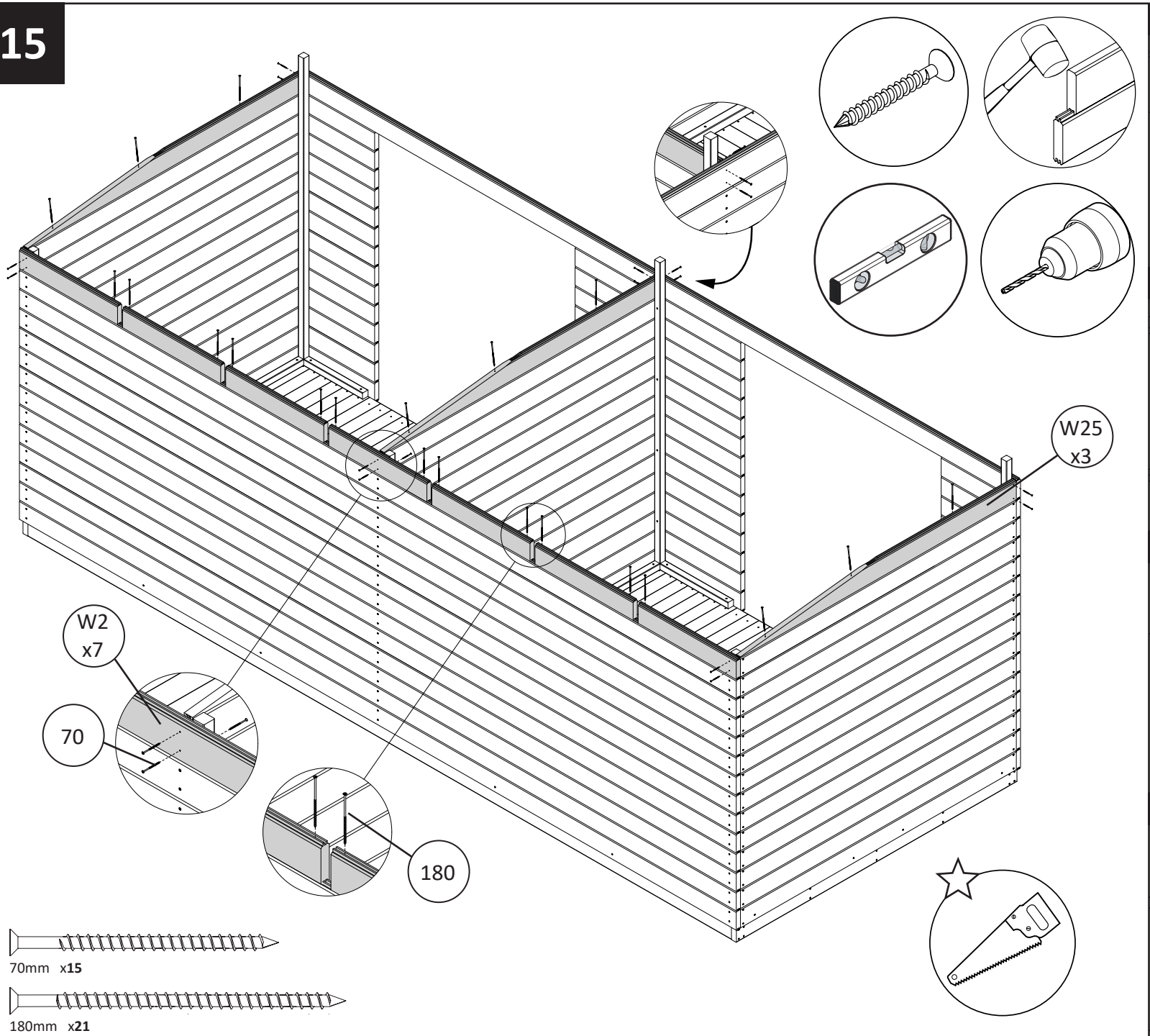

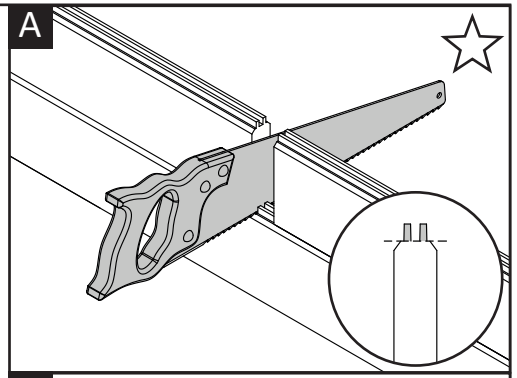

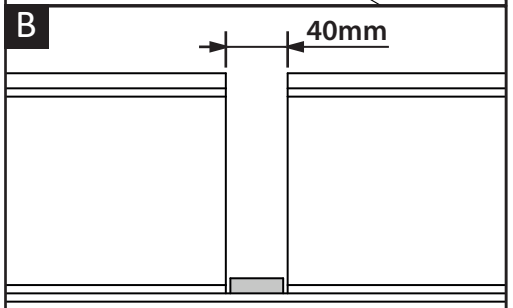

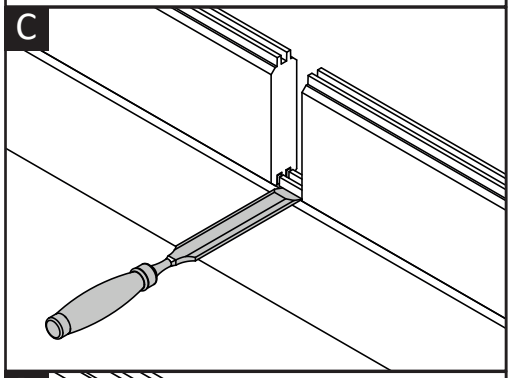

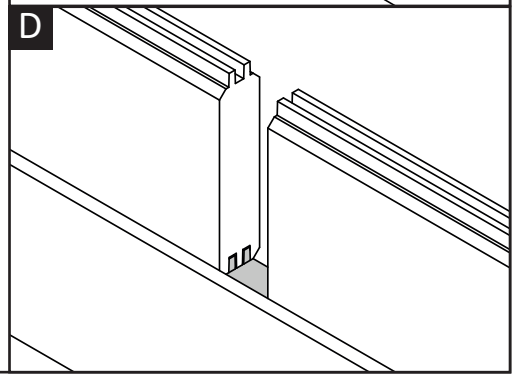

16

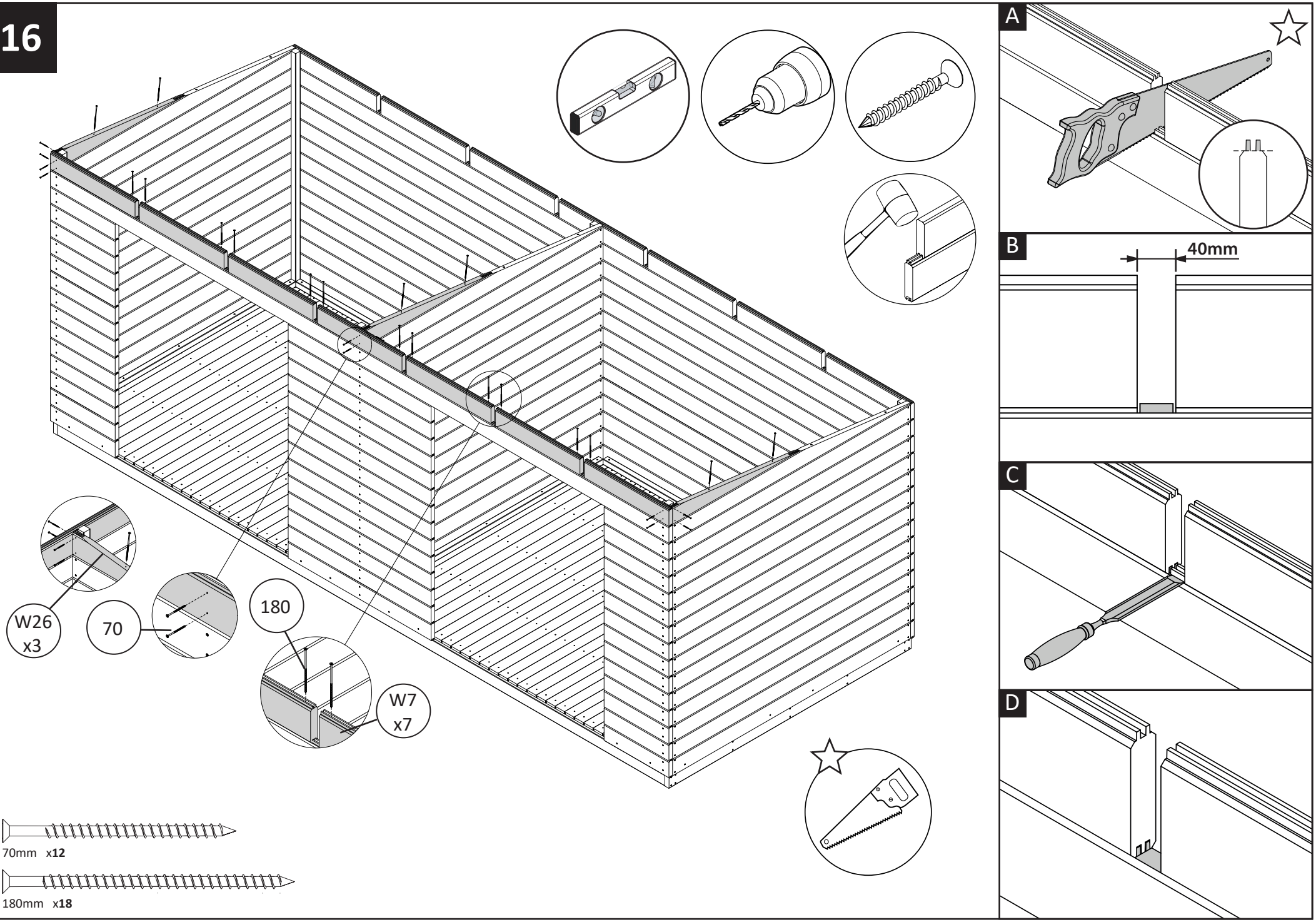

17

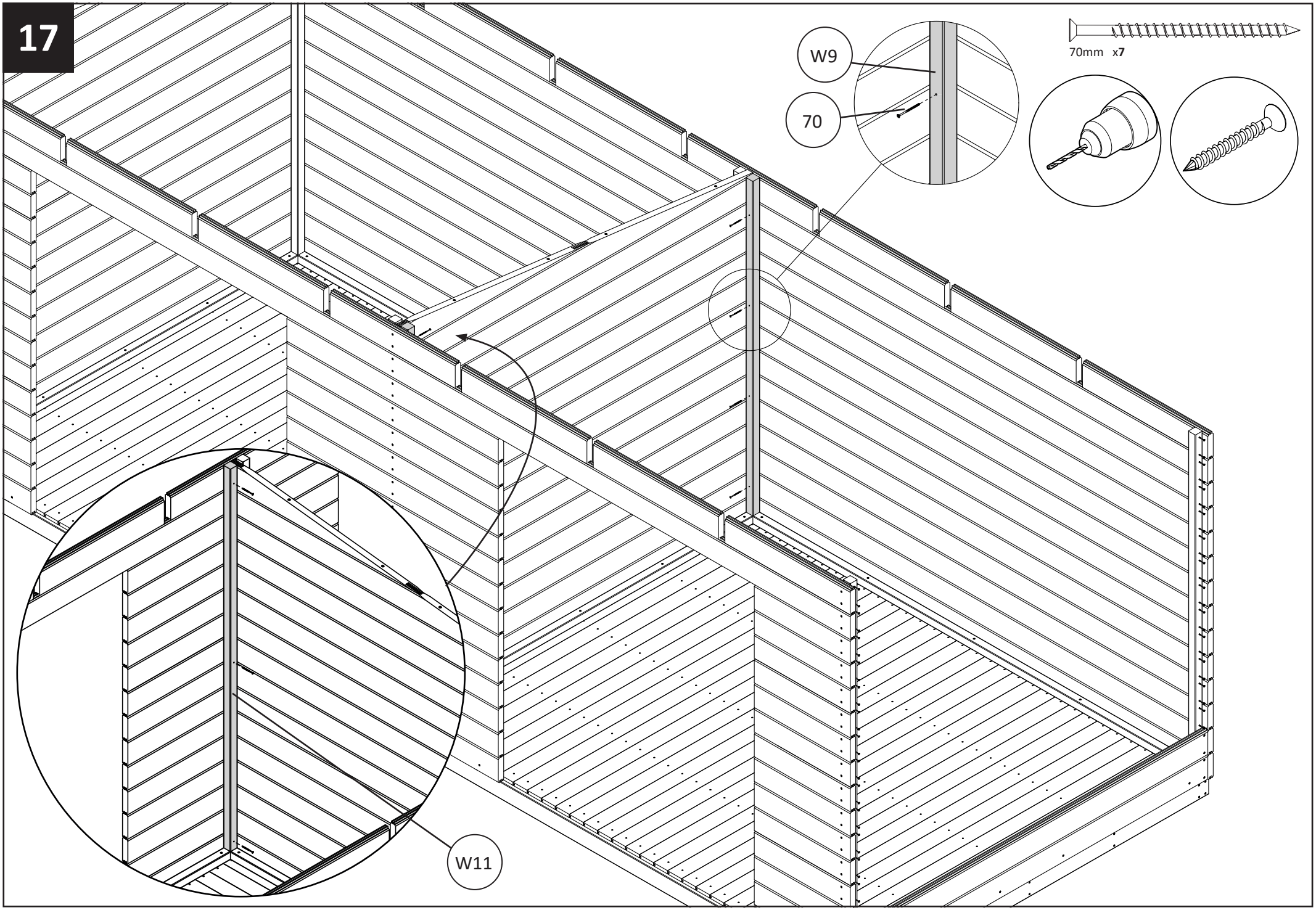

18

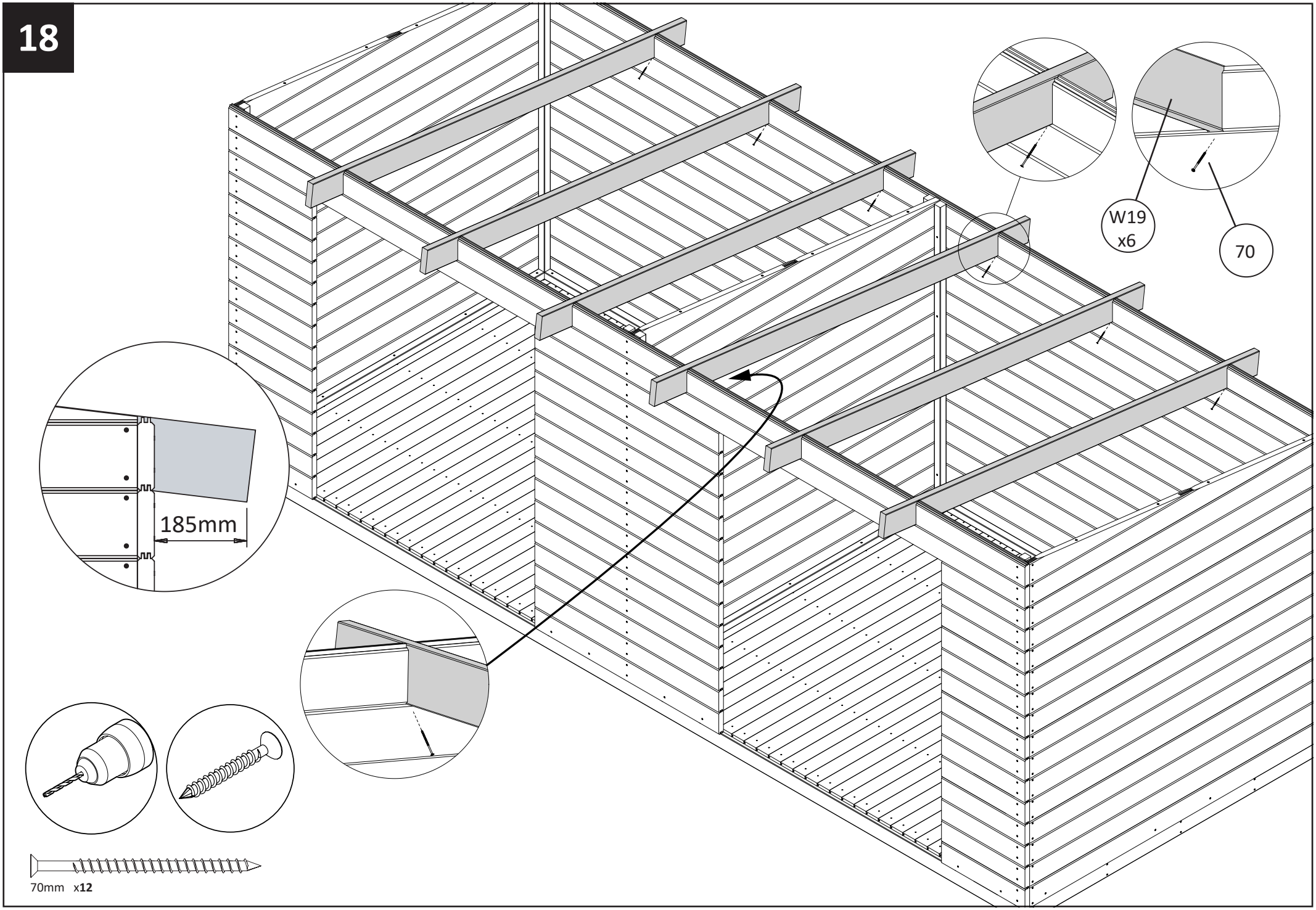

19

70mm x**12**

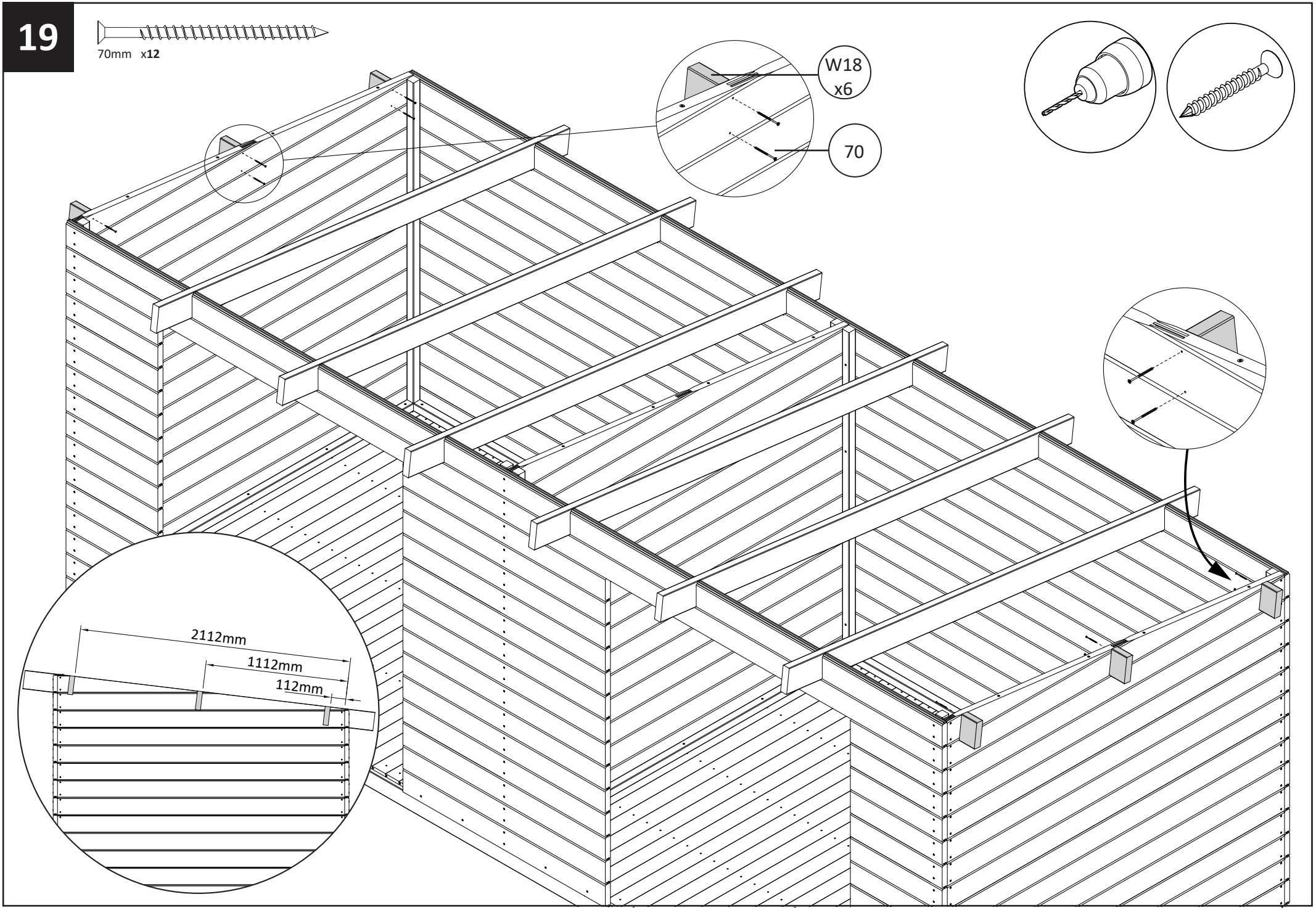

20

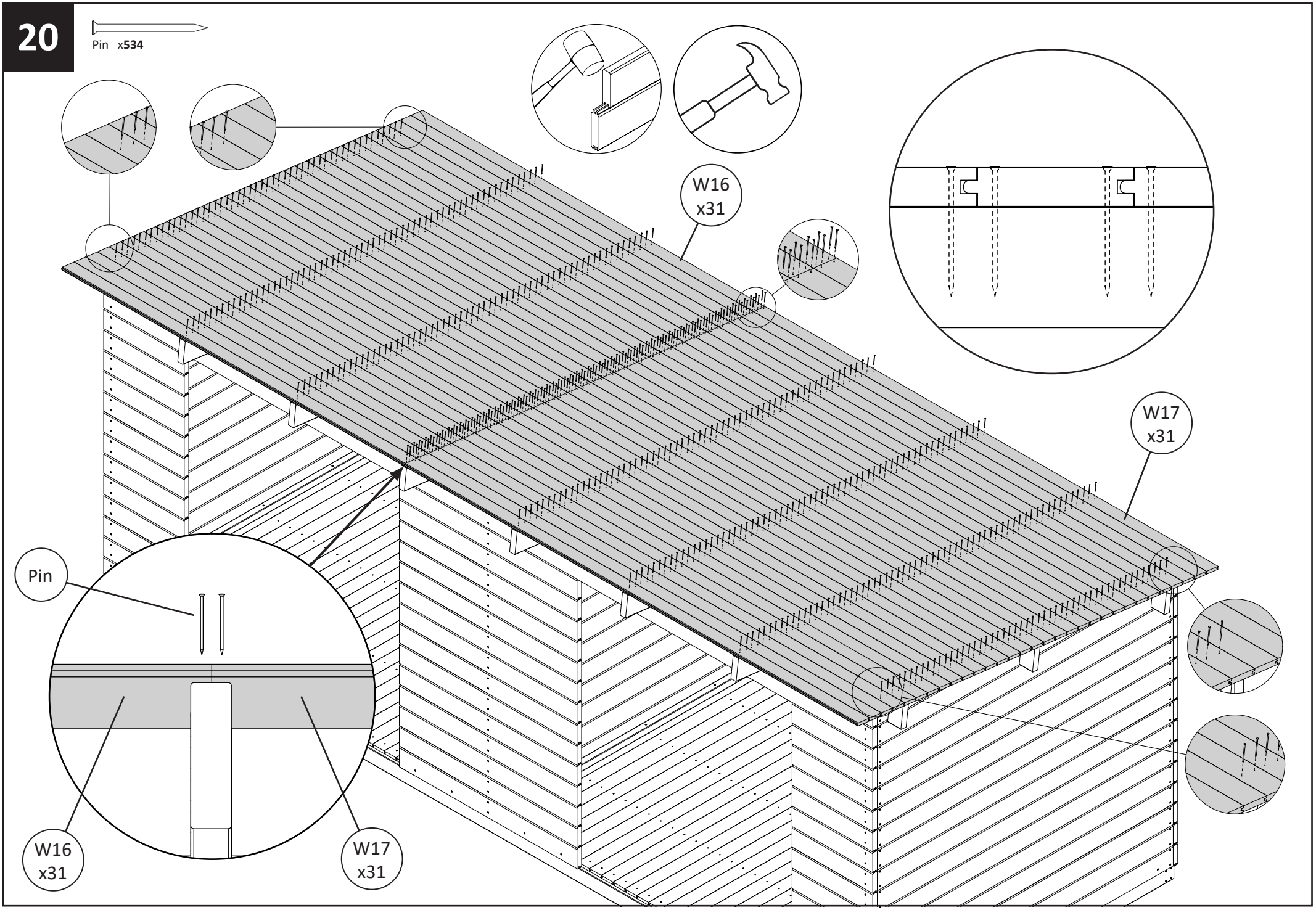

21

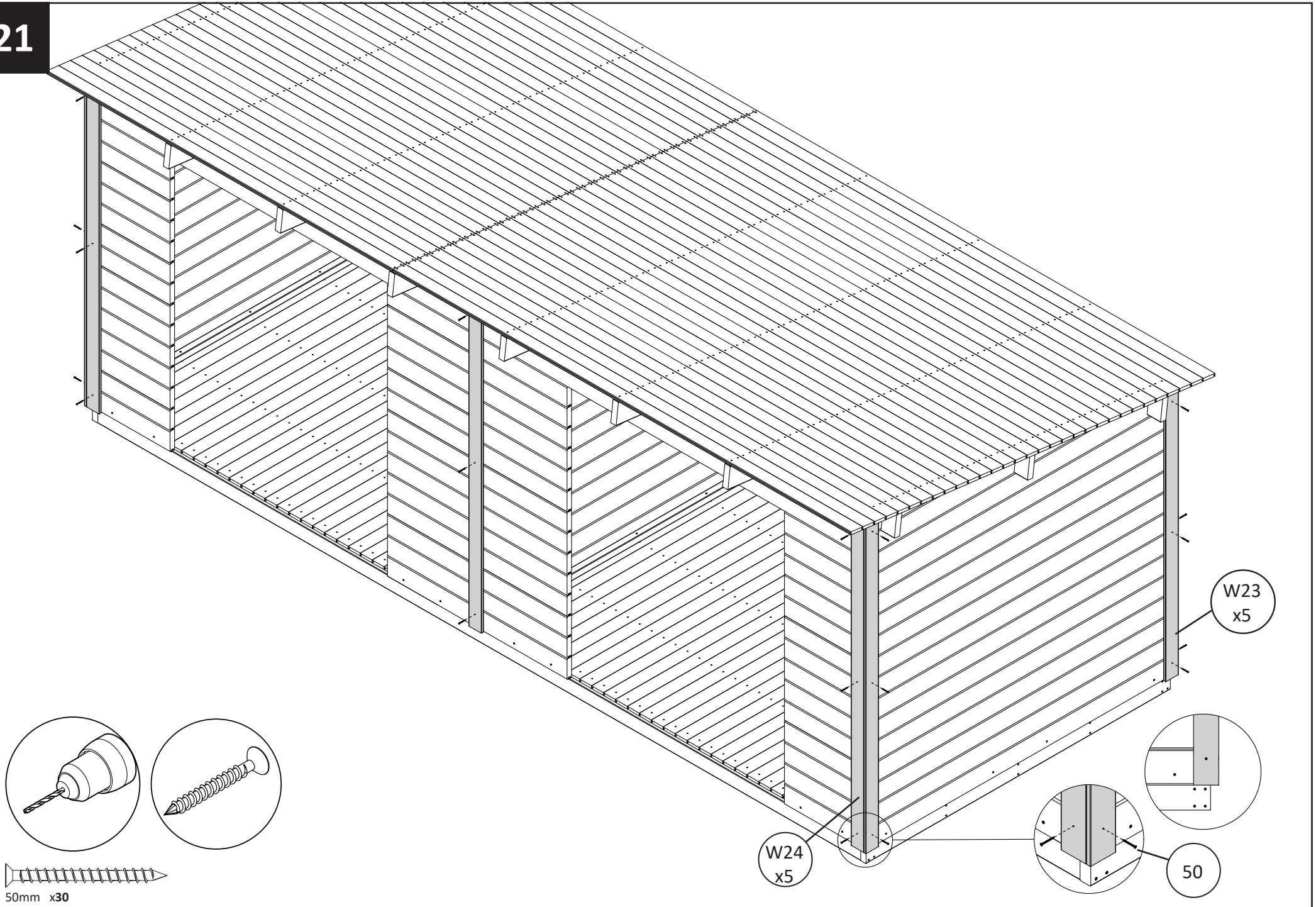

22

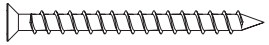

50mm x**48**

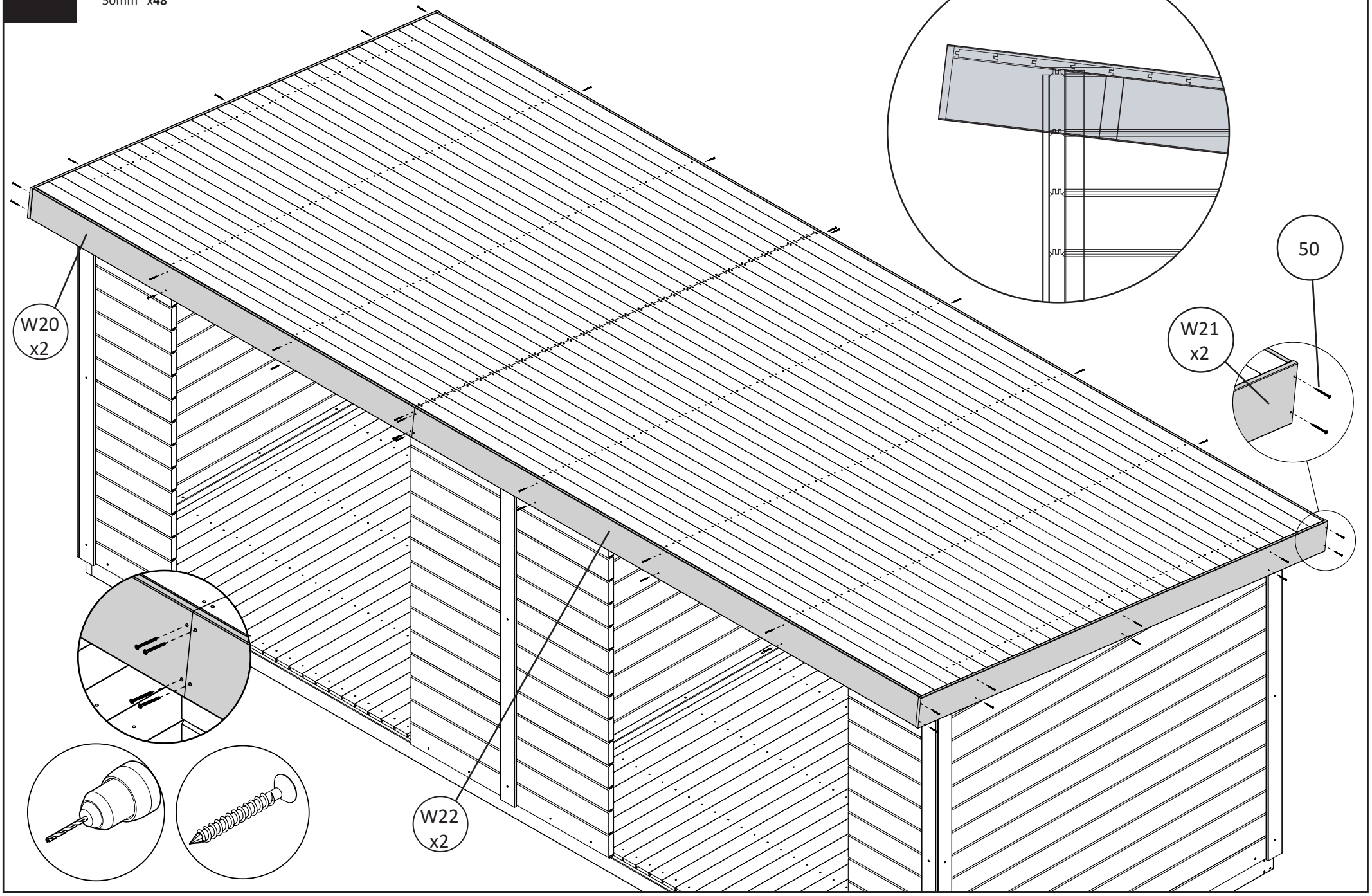

23

50mm x**8**

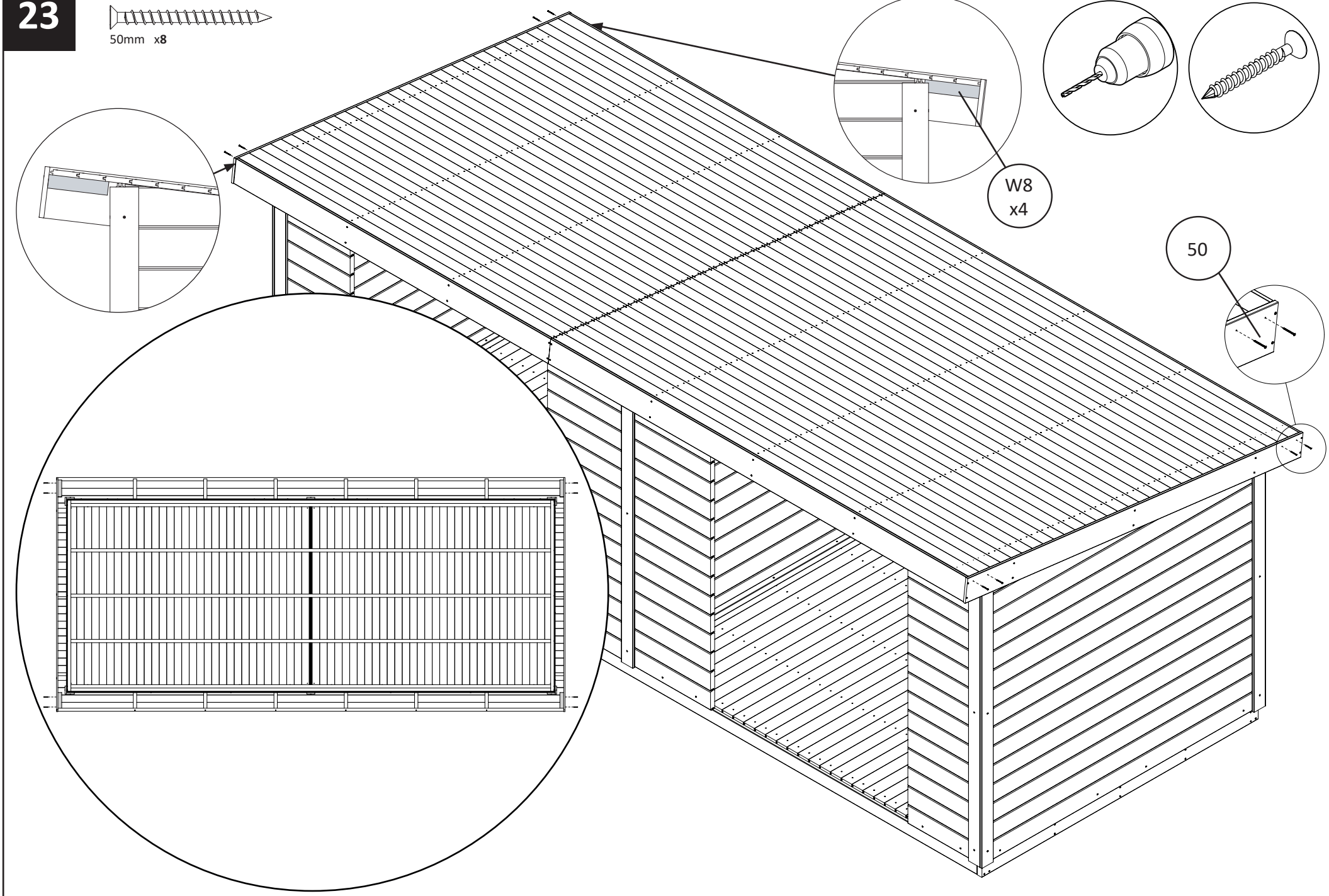

24

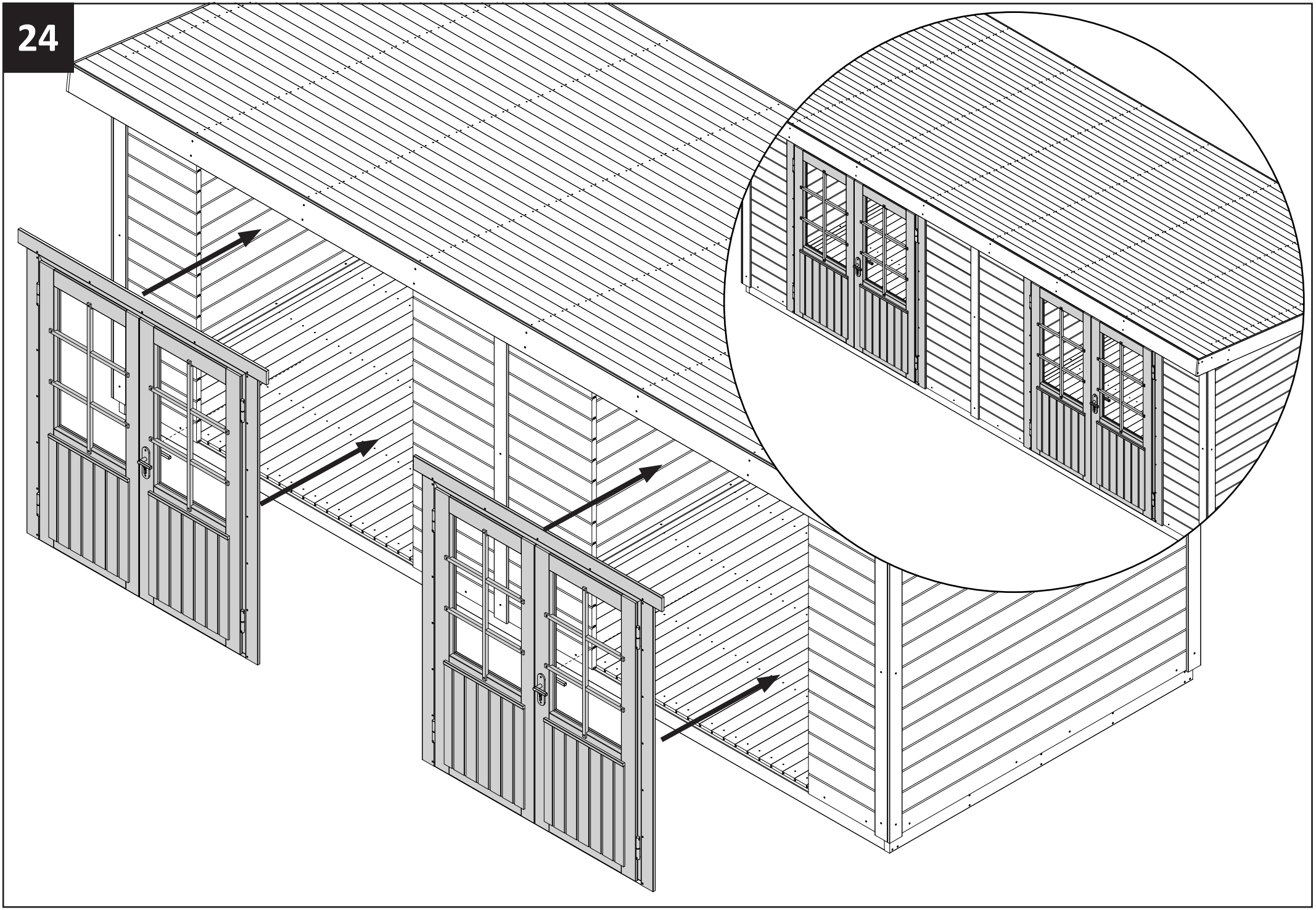

25

30mm x**38**
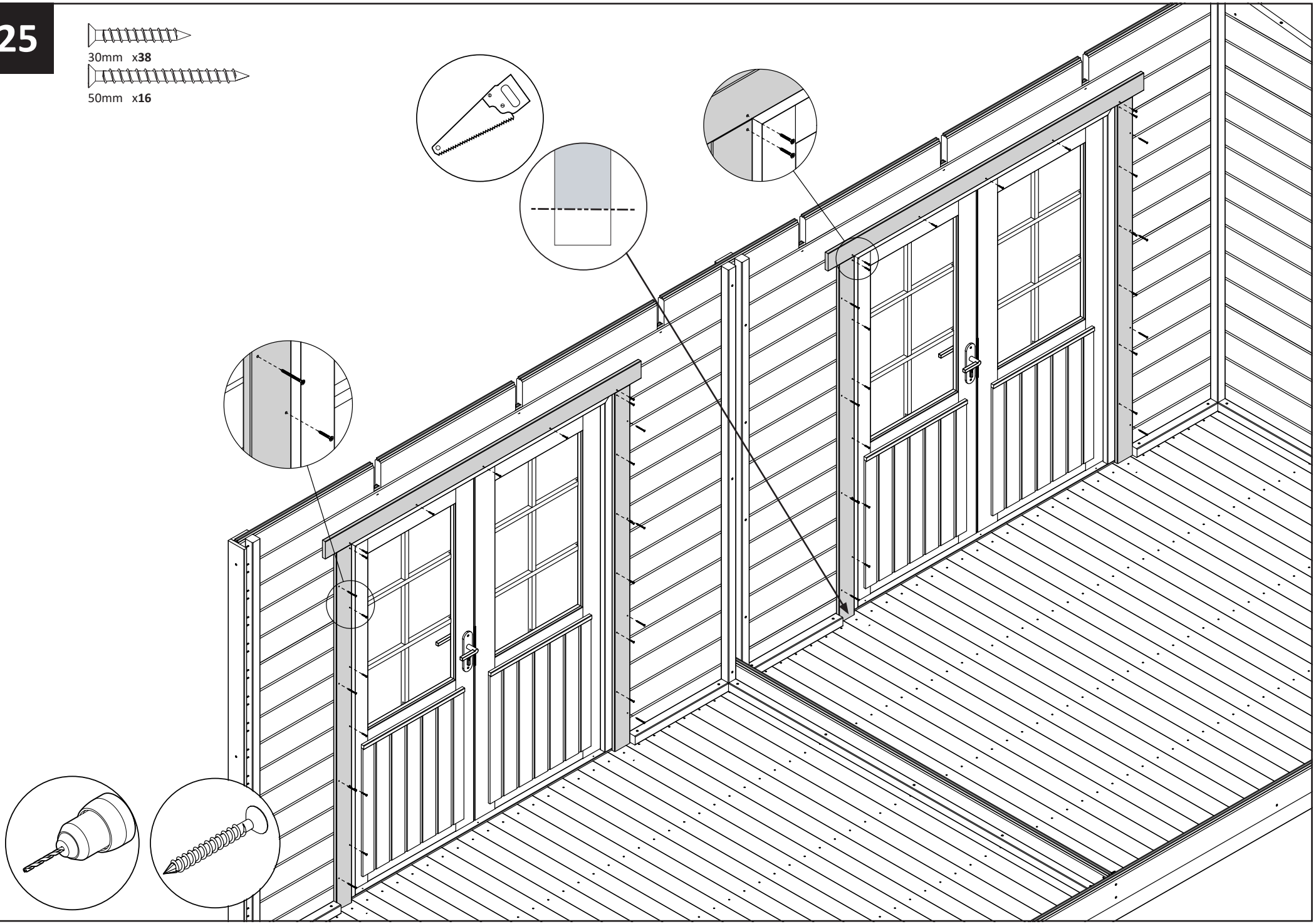
50mm x**16**